骑鲸瞰海
QJKH

YB27-25CD Lidar
Product Specification

CCH Technology & Intelligence Co., Ltd

Product Introduction

YB series lidar is a single-line lidar based on dTOF ranging principle. It features a compact size, simplicity of use, and high cost-effectiveness, making it suitable for diverse applications such as navigation, obstacle avoidance, and area monitoring.

Technical Parameters

Table 1 Technical parameters table

Detection Parameters		
Scanning radius	25m@70% reflectivity	
Scanning angle	270°	
Angular resolution	default 0.3° @30Hz Support 0.3° @20/25/30Hz/40Hz	
Distance deviation	±2cm (typical value) ①	
Repeatability	±4mm@1sigma②	
Scanning plane Angle	Pitch ±0.5°; roll ±0.5°	
Electrical and mechanical parameters		
Working voltage	DC 9~28V	
Power-on startup time	Typical 10s	
Power consumption	< 2W (No load at output)	
Output	Ethernet UDP protocol output + PNP/NPN (configurable)	
Dimensions	52mm×52mm×70mm	
Cable length	Standard 1m	
Ambient temperature	Working: -10℃~50℃ (No frost or condensation on the window) Storage: -40℃~70℃	
Ambient humidity	Working: 35%RH～85%RH; storage: 35%RH～95%RH	
Anti-optical Interference	80000Lux	
Shock resistance	Acceleration 10g; pulse duration: 16ms;	
	Number of impacts: three axes, 1000±10 times per axis	
Vibration Resistance	Frequency 10Hz ~ 55Hz; Amplitude: 0.35±0.05mm;	
	Scanning cycles: 20 times for each XYZ axis	
Protection Rating	IP65	
Electromagnetic compatibility (EMC)	EMI	EN61326-1: 2013
		EN55011; 2009 + A1: 2010
	EMS	EN61326-1: 2013
		EN61000-4-2: 2009
		EN61000-4-3: 2006+A1: 2009+A2:2010
		EN61000-4-4: 2004+A1: 2010
		EN61000-4-6: 2014
		EN61000-4-8: 2010
Configurable Functions		
Zone Configuration	Users can configure the zone into desired shape via configuration software	
Response Time	67ms (2 scan cycles) ~ 536ms (16 scan cycles), default 67ms	
Zone Group Switching	4 external input signals (INPUT1, INPUT2, INPUT3, INPUT4) enable	

	switching between 16 zone group

Notice:

① The measurement error of different reflectivity materials is controlled at ±2cm (typical). Factory test method: Three kinds of specimens (black flannels, white paper and reflective stickers) are placed on the automatic tooling of the whole machine at different angles and at the same distance (59cm). The deviation between the center value and the true distance of each material is within ±2cm, and the maximum difference between the three materials is within 2cm.

② Statistical measurement at 600mm position on 10% black velvet.

Working Principle and Protection Zone Configuration

The YB27-25CD is based on the pulsed laser ranging principle, achieving two-dimensional area detection with a 270° angle and 25m radius through rotational scanning. Users can configure the number and shape of protection zones via configuration software.

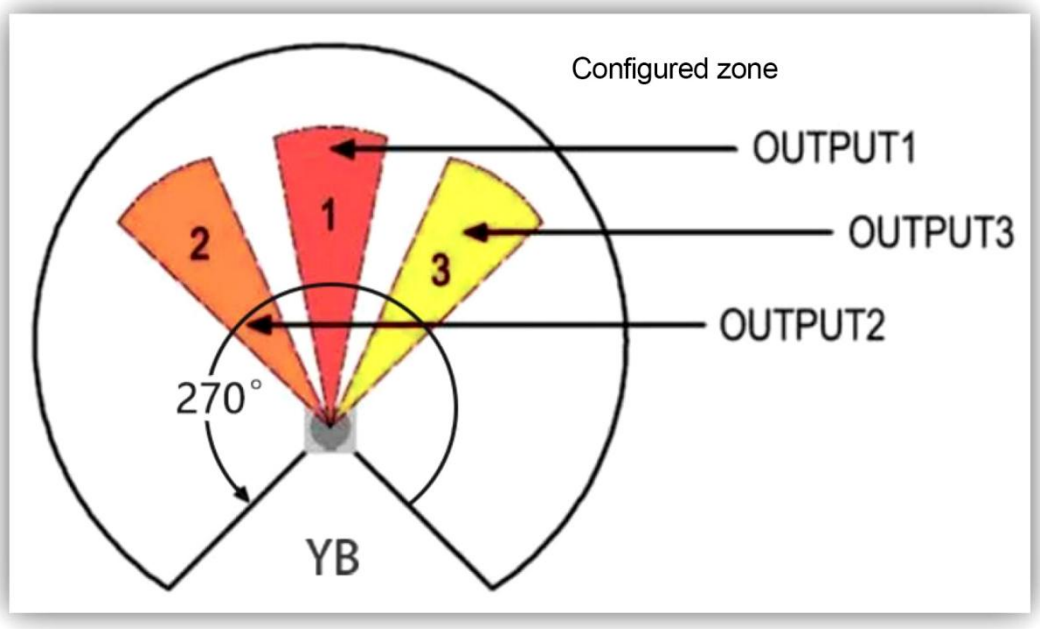

Figure 1 Protection Area Diagram 1

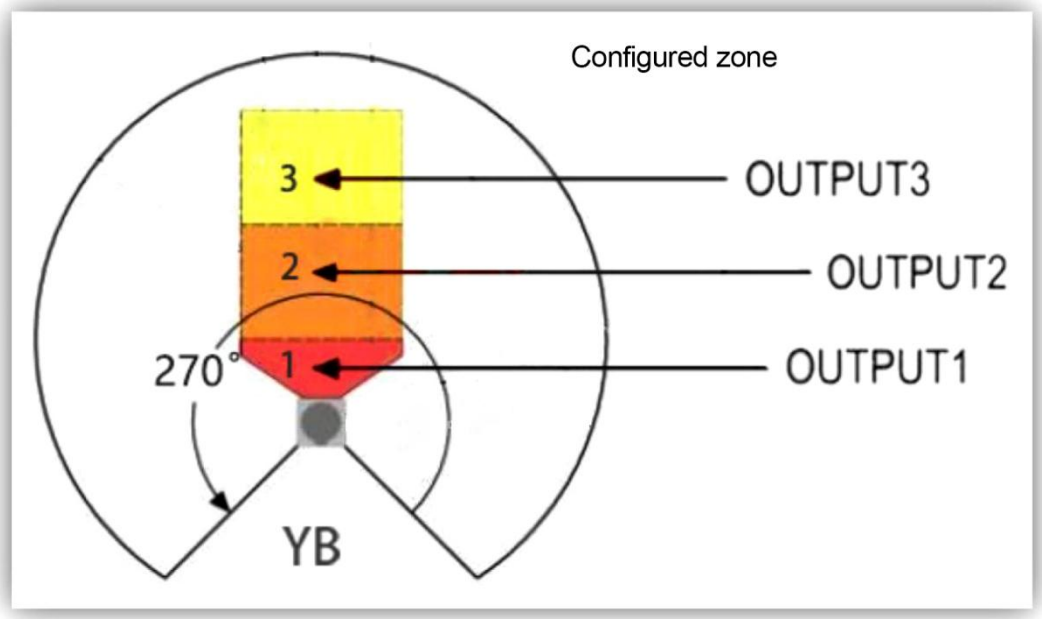

Figure 2 Protection Area Diagram 2

Table 2 Protection Zone Correspondence Table

NO	Meaning	Description
1	Protection Zone 1	When an obstacle is detected, OUTPUT1turns OFF
2	Protection Zone 2	When an obstacle is detected, OUTPUT2 turns OFF
3	Protection Zone 3	When an obstacle is detected, OUTPUT3 turns OFF

Indicator Light

Figure 3 Indicator

OK: After power-on, if no fault, the OK light is steady on; if there is a fault, the OK light flashes.

INPUT(1~4): Lights up when input is ON; turns off when input is OFF.

OUTPUT(1~3): Lights up when no obstacles detected, turns off when obstacles detected.

Note: When the device is first powered on, all indicators will enter a chasing light mode, and the OK light will be off for 10 seconds, indicating the device is starting up. This is normal.

Cable and Interface

The structures of power signal cable and Ethernet cable are shown in the figure below. Standard cable length is 1 meter. The configuration cable is a standard USB Type-C data cable (optional).

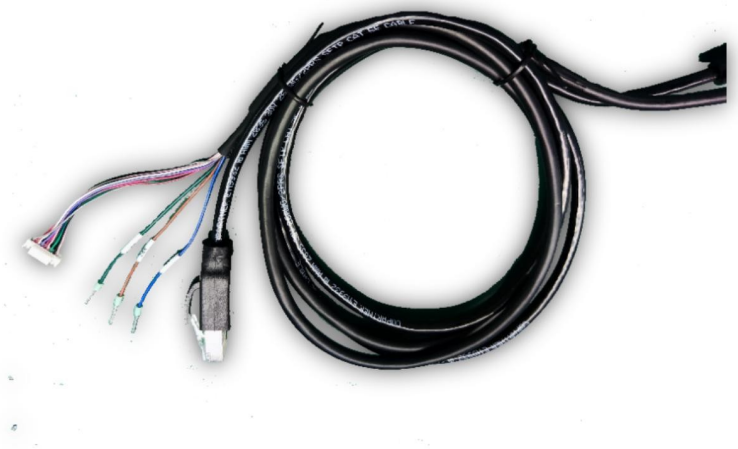

Figure 4 Cables

Table 3 Cable Color Signal Relationship Table

Color	Signal	Description
Blue	0V	Operating Power
Brown	24V	
Yellow/Green	PE	
Red/Blue	COM	Common terminal for zone group switching signal input. When input signal is PNP logic, COM connects to 0V; when input signal is NPN logic, COM connects to 24V.
Pink	INPUT1	Zone group selection signals. Switching between zone groups is achieved by changes in the INPUT1, INPUT2, INPUT3, INPUT4 input signals.
Green	INPUT2	
Gray	INPUT3	
Red	INPUT4	
Black	OUTPUT1	Three independent PNP (NPN) outputs; PNP transistor output; ON state: load current ≤ 100mA, output voltage ≥Vcc-2V; OFF state: leakage current ≤ 1mA, residual voltage ≤ 1V (excluding the influence of wire extension); NPN transistor output, ON state: load current ≤100mA, output voltage ≤2V; OFF state: leakage current ≤1mA, residual voltage ≤2V (excluding the influence of wire extension); ON when no object is in the protection zone; OFF when an object is present.
White	OUTPUT2	
Purple	OUTPUT3	
Gray/Pink	OK	Independent PNP (NPN) output, outputs OFF in fault state, ON when no fault.

Cable Wiring Diagram

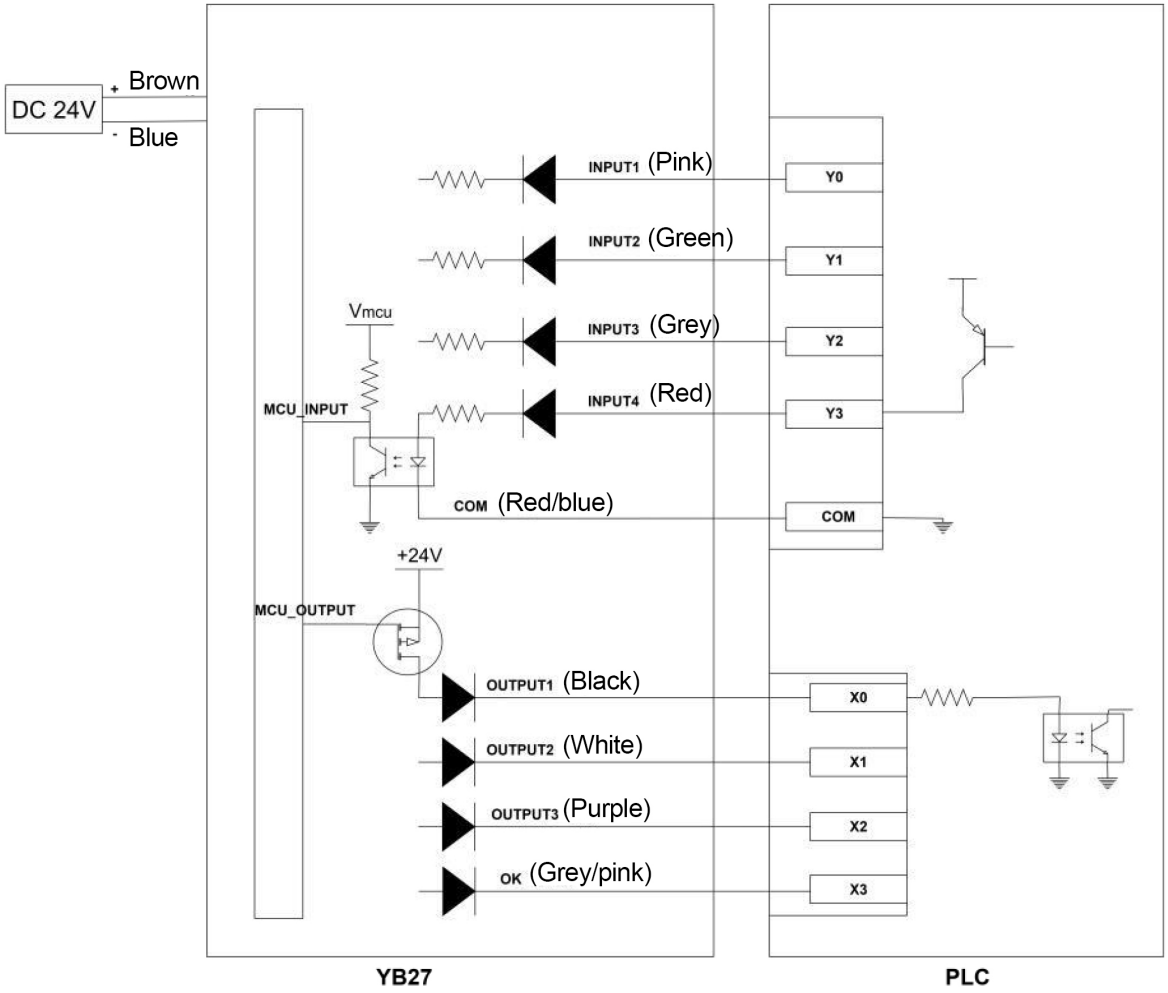

Figure 5 Wiring Diagram under PNP Logic

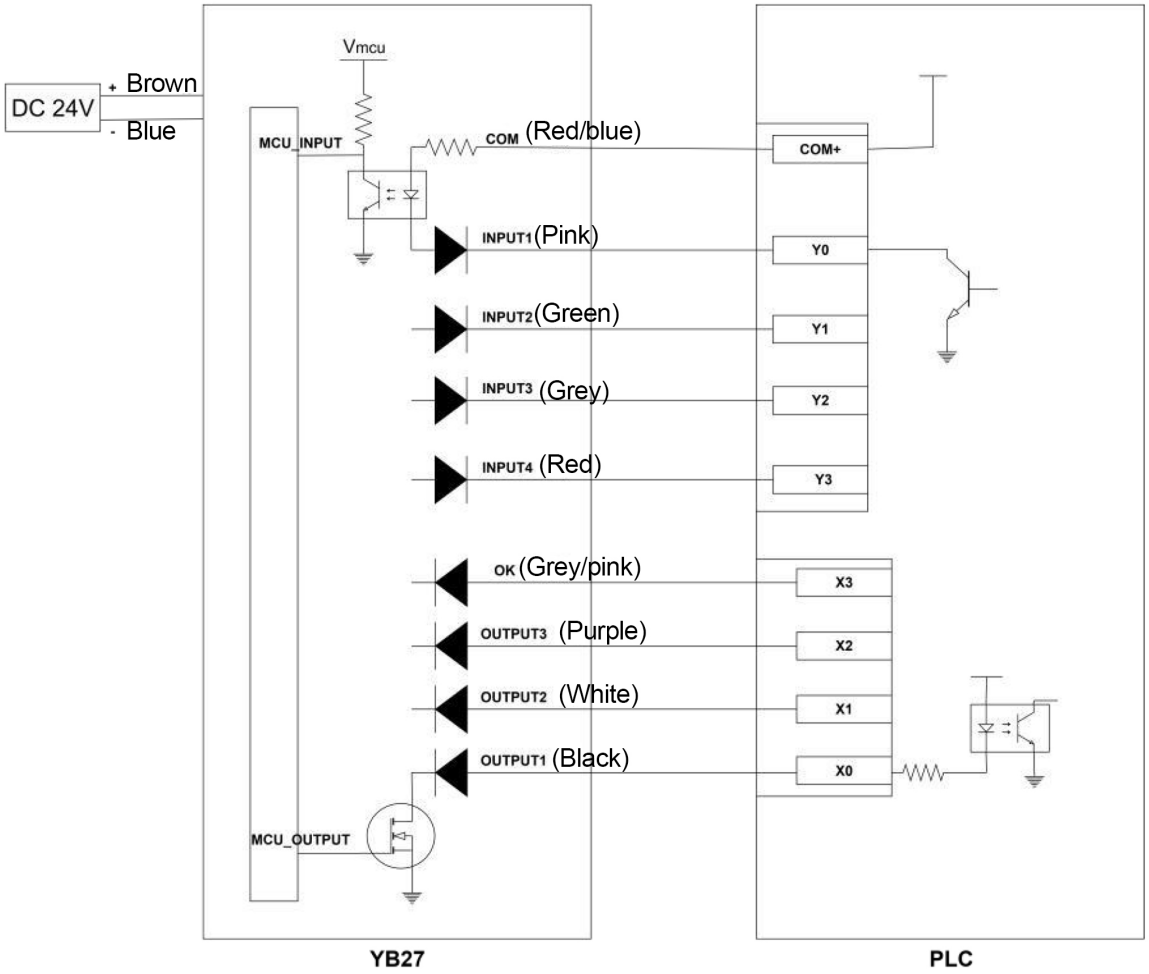

Figure 6 Wiring Diagram under NPN Logic

Machine Dimension

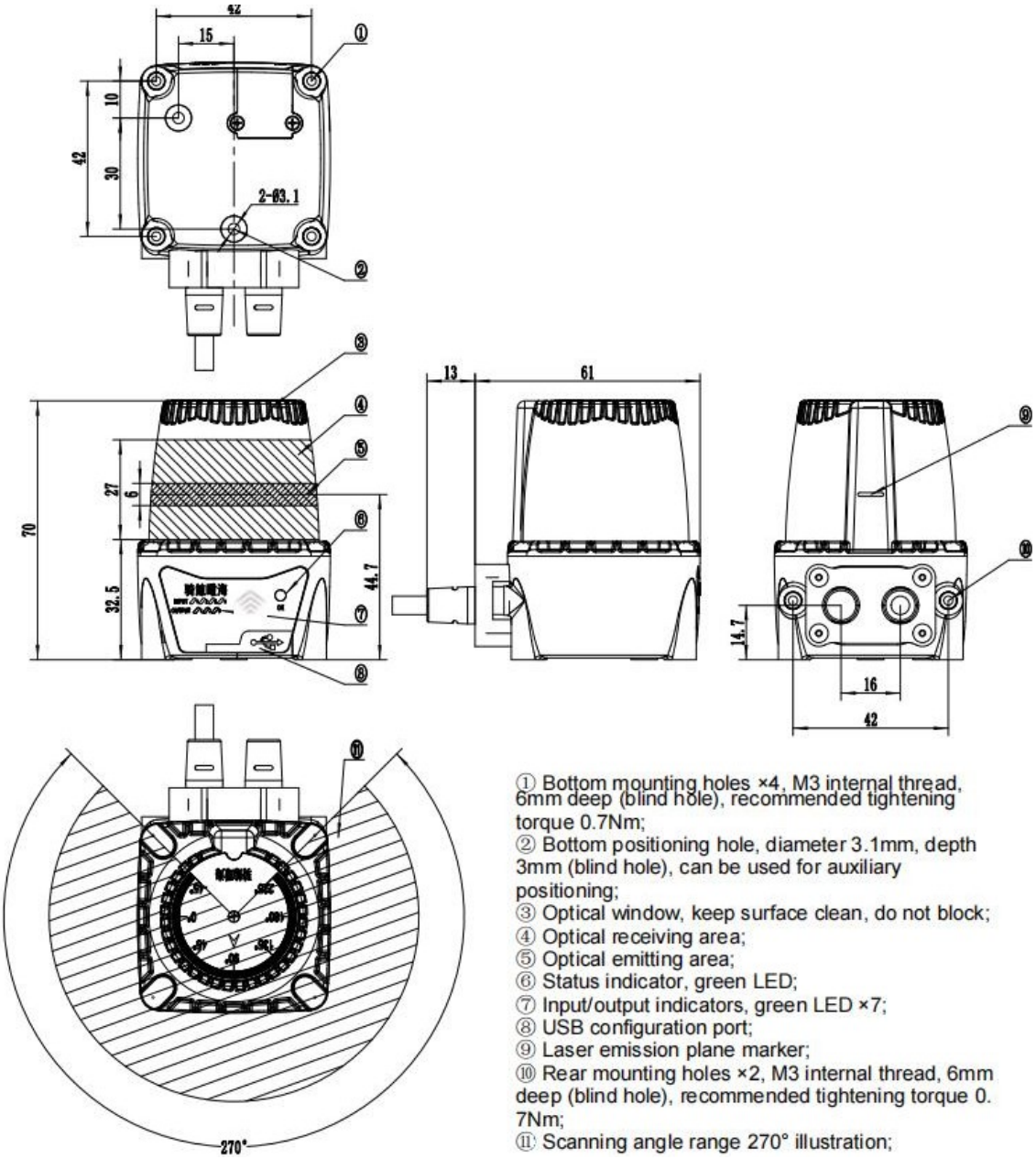

① Bottom mounting holes ×4, M3 internal thread, 6mm deep (blind hole), recommended tightening torque 0.7Nm;
② Bottom positioning hole, diameter 3.1mm, depth 3mm (blind hole), can be used for auxiliary positioning;
③ Optical window, keep surface clean, do not block;
④ Optical receiving area;
⑤ Optical emitting area;
⑥ Status indicator, green LED;
⑦ Input/output indicators, green LED ×7;
⑧ USB configuration port;
⑨ Laser emission plane marker;
⑩ Rear mounting holes ×2, M3 internal thread, 6mm deep (blind hole), recommended tightening torque 0.7Nm;
⑪ Scanning angle range 270° illustration;

Figure 7 Mechanical dimensions

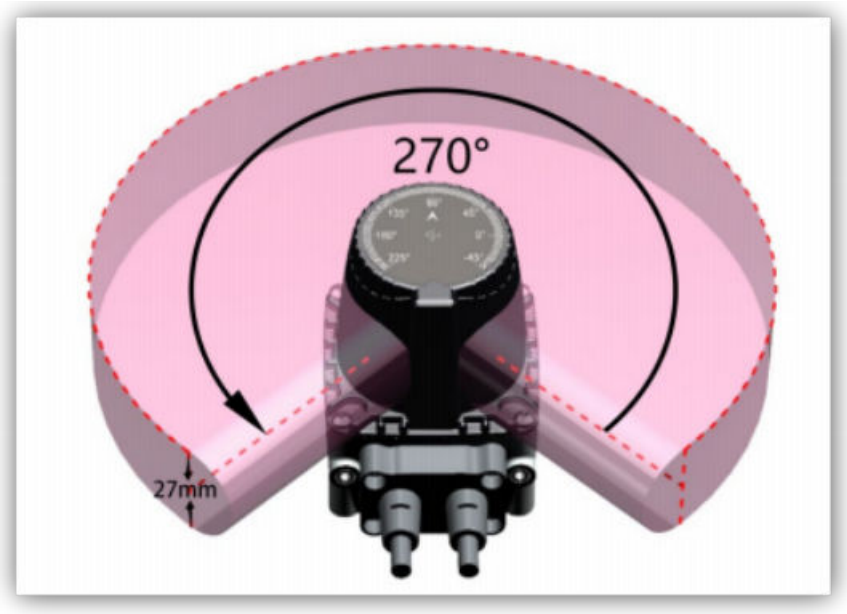

Figure 8 Schematic diagram of scanning range

Communication Protocol

Table 4: Data Format Summary

Data Format Description	Summary	
struct cmd_frame { uint8_t start_code[4]; uint16_t length; uint8_t check_sum; uint8_t cmd_type; uint8_t data[]; }__attribute__ ((packed));	1. This communication protocol uses the UDP communication protocol; 2. Default IP address 192.168.0.10, port number 2112; 3. Distance data and echo intensity data use little-endian format; 4. Except for distance data and echo intensity data, big-endian format is used uniformly;	
Name	**Bytes**	**Description**
start_code	4	Sensor start code 0xFE 0x5A 0xA5 0x55
length	2	Data length following the length field, high byte first, low byte last.
check_sum	1	1-byte checksum, calculated as the XOR value of all data from cmd_type to the end of the frame
cmd_type	1	Command type 0x01: Get lidar real-time data
data[M]	M	Command data, detailed data format under each command type, can be empty

The angular resolution of YB27-25CD is 0.3 degrees. After receiving the command to get real-time data, the lidar periodically sends distance and echo intensity data. Within the range of -45° to 225°, which covers 270 degrees, a total of 270/0.3+ 1 = 901 sample points are collected. Each sample point occupies 4 bytes of storage (2 bytes for distance data and 2 bytes for echo intensity data, with the distance data unit being 1 mm). The sample point data occupies a total of 901 * 2 (distance data) + 901 * 2 (echo intensity data) = 3,604 bytes. Additionally, with a 256-byte device information field, the total data size amounts to 3,604 bytes, which exceeds the UDP transmission limit of 1,472 bytes. Therefore, the data is actively split into 4 packets (N=4) at the application layer for transmission.

Table 5: PC-side Real-time Data Command Table

Type	start_code[4]	length	check_sum	cmd_type
Get Real-time Data	0xFE 0x5A 0xA5 0x55	0x00 0x02	0x01	0x01

Table 6: Lidar Reply Real-time Data Table (excluding sensor data part)

Lidar Real-time Data	start_code[4]	length	check_sum	cmd_type	sensor data
frame_num_1	0xFE 0x5A 0xA5 0x55	0xxx 0xxx	0xXX	0x01	...
frame_num_2	0xFE 0x5A 0xA5 0x55	0xxx 0xxx	0xXX	0x01	...
...	...	...	...	...	...
frame_num_N-2	0xFE 0x5A 0xA5 0x55	0xxx 0xxx	0xXX	0x01	...
frame_num_N-1	0xFE 0x5A 0xA5 0x55	0xxx 0xxx	0xXX	0x01	...
frame_num_N	0xFE 0x5A 0xA5 0x55	0xxx 0xxx	0xXX	0x01	...

Continued: sensor data part

Table 7: Sensor Data Table

total_index	sub_pkg_num	sub_index	sub_data_type	data_len	data
0xxx 0xxx	N	0	0x01	0xxx 0xxx	0xxx 0xxx... 0xxx 0xxx
Same as above	N	1	0x01	0xxx 0xxx	0xxx 0xxx... 0xxx 0xxx
...	...	...	...	0xxx 0xxx	0xxx 0xxx... 0xxx 0xxx
Same as above	N	N-3	0x02	0xxx 0xxx	0xxx 0xxx... 0xxx 0xxx
Same as above	N	N-2	0x02	0xxx 0xxx	0xxx 0xxx... 0xxx 0xxx
Same as above	N	N-1	0x03	0xxx 0xxx	add_info[256]

Table 8: Sensor Data Format Description

total_index:
Length 2 bytes, used to record the total packet sequence number, incrementing sequentially, range 0-65535, high byte first, low byte last
sub_pkg_num:
Length 1 byte, used to record the number of sub-packets contained under this total packet sequence number.
sub_index:
Length 1 byte, used to record the sub-packet sequence number under this total packet number. Sub-packets are merged into one complete frame.
sub_data_type:
Length 1 byte, used to record data type. 0x01: Distance data; 0x02: Echo data; 0x03: Additional information;
data_len:
Length 2 bytes, used to record the byte count of the subsequent sample point data or additional information bytes in this field, high byte first, low byte last.
data[ ]:
Variable length, used to store lidar sample distance data, echo intensity data, or additional information fields. Distance data and echo data are distinguished by the data type field. Each distance data occupies 2 bytes, low byte first, high byte last; each echo data occupies 2 bytes, low byte first, high byte last.

Additional information details see table below:

Table 9: Additional Information Data Table

Name	Field Index	Field Length (BYTE)	Description
dev_type	0~39	40	Device Type
dev_sn	40~71	32	Device SN
Angular Resolution	72~75	4	(20000)--0.2 degrees (25000)--0.25 degrees (30000)--0.3 degrees (33333)--0.33 degrees (50000)--0.5 degrees High byte first, low byte last.
Number of Sample Points	76~77	2	High byte first, low byte last. Represents the total number of sample points in the 270° scanning range.
Software Version	78~81	4	4-byte version information.
Hardware Version	82~85	4	4-byte version information.
System Working Status	86	1	0x00： Normal operation Other: Fault status 0x01: Storage fault 0x02: Measurement fault 0x03: Motor fault 0x04: Self-test fault
Angular Resolution Multiple	87~90	4	Angular resolution multiple (corresponding to the angular resolution above): 100000
Scan Time scan_time	91~94	4	4 bytes, full circle time (unit 0.1us). High byte first, low byte last.
rev	95~96	2	rev
Sample Point Timestamp sample_time	97~100	4	4-byte timestamp, (unit 1ms). High byte first, low byte last.
rev	101~255	xx	rev