骑鲸瞰海
QJKH

YB27-15CS Lidar
Product Specification

CCH Technology & Intelligence Co., Ltd

Product Introduction

YB series lidar is a single-line lidar based on dTOF ranging principle. It features a compact size, simplicity of use, and high cost-effectiveness, making it suitable for diverse applications such as navigation, obstacle avoidance, and area monitoring.

Technical Parameters

Table 1 Technical parameters table

Detection Parameters		
Scanning radius	15m@70% reflectivity	
Scanning angle	270°	
Angular resolution	default 0.3° @30Hz Support 0.3° @20/25/30Hz/40Hz	
Distance deviation	±2cm (typical value) ①	
Repeatability	±4mm@1sigma②	
Scanning plane Angle	Pitch ±0.5°; roll ±0.5°	
Electrical and mechanical parameters		
Working voltage	DC 9~28V	
Power-on startup time	Typical 10s	
Power consumption	< 2W (No load at output)	
Output	PNP/NPN configurable (default: PNP)	
Dimensions	52mm×52mm×70mm	
Cable length	Standard 1m	
Ambient temperature	Working: -10℃~50℃ (No frost or condensation on the window) Storage: -40℃~70℃	
Ambient humidity	Working: 35%RH～85%RH; storage: 35%RH～95%RH	
Anti-optical Interference	80000Lux	
Shock resistance	Acceleration 10g; pulse duration: 16ms;	
	Number of impacts: three axes, 1000±10 times per axis	
Vibration Resistance	Frequency 10Hz ~ 55Hz; Amplitude: 0.35±0.05mm;	
	Scanning cycles: 20 times for each XYZ axis	
Protection Rating	IP65	
Electromagnetic compatibility (EMC)	EMI	EN61326-1: 2013
		EN55011; 2009 + A1: 2010
	EMS	EN61326-1: 2013
		EN61000-4-2: 2009
		EN61000-4-3: 2006+A1: 2009+A2:2010
		EN61000-4-4: 2004+A1: 2010
		EN61000-4-6: 2014
		EN61000-4-8: 2010
Configurable Functions		
Zone Configuration	Users can configure the zone into desired shape via configuration software	
Response Time	67ms (2 scan cycles) ~ 536ms (16 scan cycles), default 67ms	
Zone Group Switching	4 external input signals (INPUT1, INPUT2, INPUT3, INPUT4) enable	

	switching between 16 zone group

Notice:

① The measurement error of different reflectivity materials is controlled at ±2cm (typical). Factory test method: Three kinds of specimens (black flannels, white paper and reflective stickers) are placed on the automatic tooling of the whole machine at different angles and at the same distance (59cm). The deviation between the center value and the true distance of each material is within ±2cm, and the maximum difference between the three materials is within 2cm.

② Statistical measurement at 600mm position on 10% black velvet.

Working Principle and Protection Zone Configuration

The YB27-15CS is based on the pulsed laser ranging principle, achieving two-dimensional area detection with a 270° angle and 15m radius through rotational scanning. Users can configure the number and shape of protection zones via configuration software.

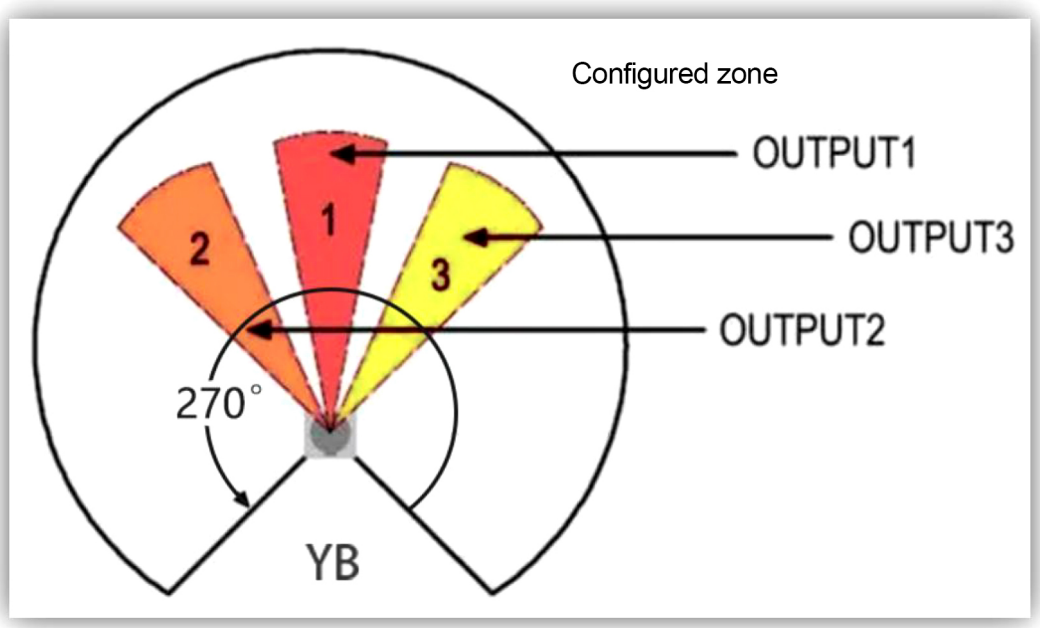

Figure 1 Protection Area Diagram 1

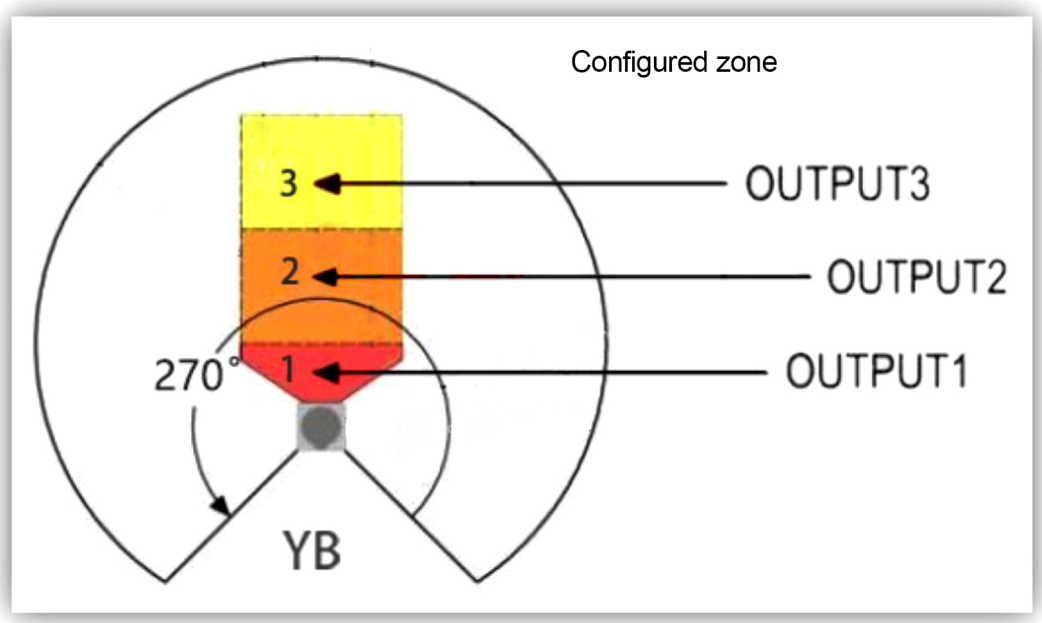

Figure 2 Protection Area Diagram 2

Table 2 Protection Zone Correspondence Table

NO	Meaning	Description
1	Protection Zone 1	When an obstacle is detected, OUTPUT1turns OFF
2	Protection Zone 2	When an obstacle is detected, OUTPUT2 turns OFF
3	Protection Zone 3	When an obstacle is detected, OUTPUT3 turns OFF

Indicator Light

Figure 1 Indicator

OK: After power-on, if no fault, the OK light is steady on; if there is a fault, the OK light flashes.

INPUT(1~4): Lights up when input is ON; turns off when input is OFF.

OUTPUT(1~3): Lights up when no obstacles detected, turns off when obstacles detected.

Note: When the device is first powered on, all indicators will enter a chasing light mode, and the OK light will be off for 10 seconds, indicating the device is starting up. This is normal.

Cable and Interface

The power signal cable structure is shown in the figure below. Standard cable length is 1 meter. The configuration cable is a standard USB Type-C data cable (optional).

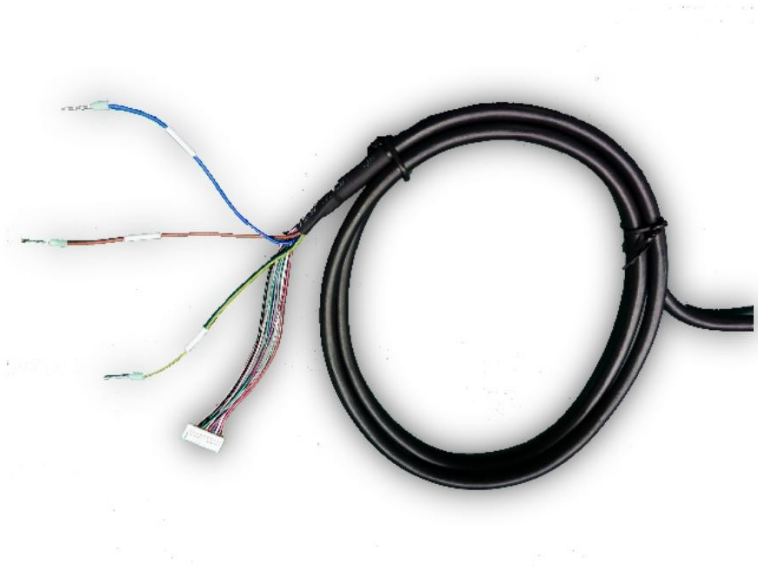

Figure 4 Power signal cable

Table 3 Cable Color Signal Relationship Table

Color	Signal	Description
Blue	0V	Operating Power
Brown	24V	
Yellow/Green	PE	
Red/Blue	COM	Common terminal for zone group switching signal input. When input signal is PNP logic, COM connects to 0V; when input signal is NPN logic, COM connects to 24V.
Pink	INPUT1	Zone group selection signals. Switching between zone groups is achieved by changes in the INPUT1, INPUT2, INPUT3, INPUT4 input signals.
Green	INPUT2	
Gray	INPUT3	
Red	INPUT4	
Black	OUTPUT1	Three independent PNP (NPN) outputs; PNP transistor output; ON state: load current ≤ 100mA, output voltage ≥Vcc-2V; OFF state: leakage current ≤ 1mA, residual voltage ≤ 1V (excluding the influence of wire extension); NPN transistor output, ON state: load current ≤100mA, output voltage ≤2V; OFF state: leakage current ≤1mA, residual voltage ≤2V (excluding the influence of wire extension); ON when no object is in the protection zone; OFF when an object is present.
White	OUTPUT2	
Purple	OUTPUT3	
Gray/Pink	OK	Independent PNP (NPN) output, outputs OFF in fault state, ON when no fault.

Cable Wiring Diagram

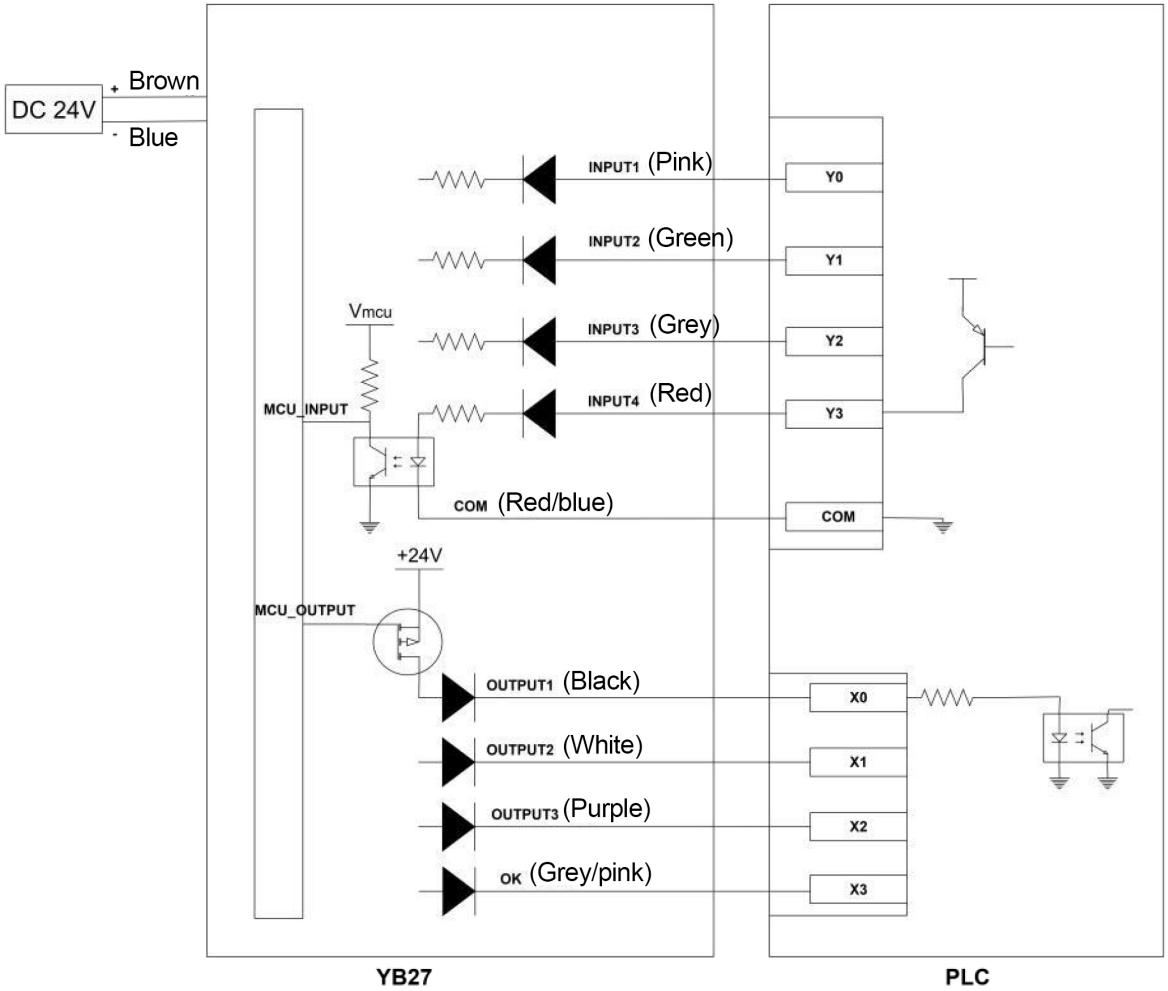

Figure 5 Wiring Diagram under PNP Logic

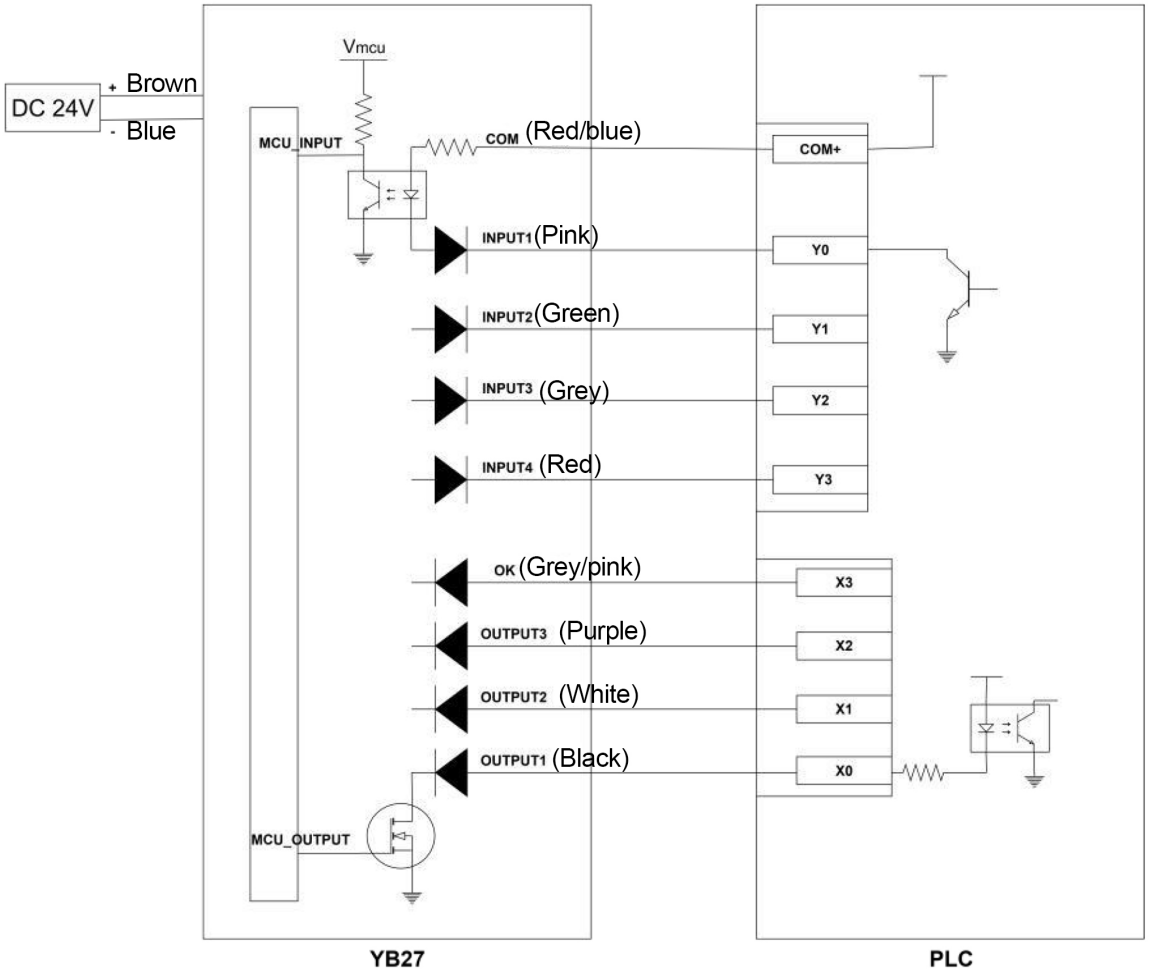

Figure 6 Wiring Diagram under NPN Logic

Machine Dimension

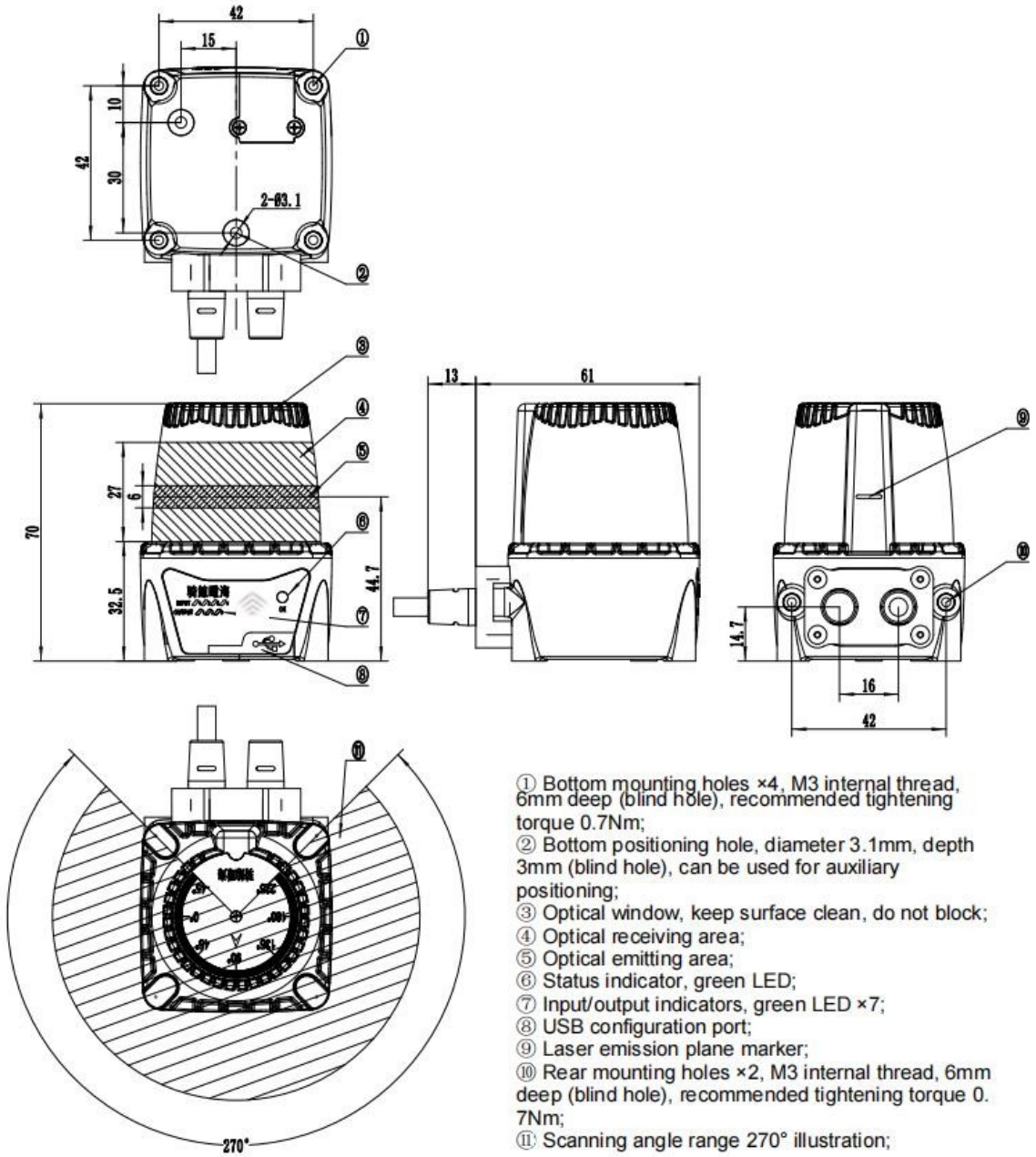

① Bottom mounting holes ×4, M3 internal thread, 6mm deep (blind hole), recommended tightening torque 0.7Nm;
② Bottom positioning hole, diameter 3.1mm, depth 3mm (blind hole), can be used for auxiliary positioning;
③ Optical window, keep surface clean, do not block;
④ Optical receiving area;
⑤ Optical emitting area;
⑥ Status indicator, green LED;
⑦ Input/output indicators, green LED ×7;
⑧ USB configuration port;
⑨ Laser emission plane marker;
⑩ Rear mounting holes ×2, M3 internal thread, 6mm deep (blind hole), recommended tightening torque 0.7Nm;
⑪ Scanning angle range 270° illustration;

Figure 7 Mechanical dimension drawing

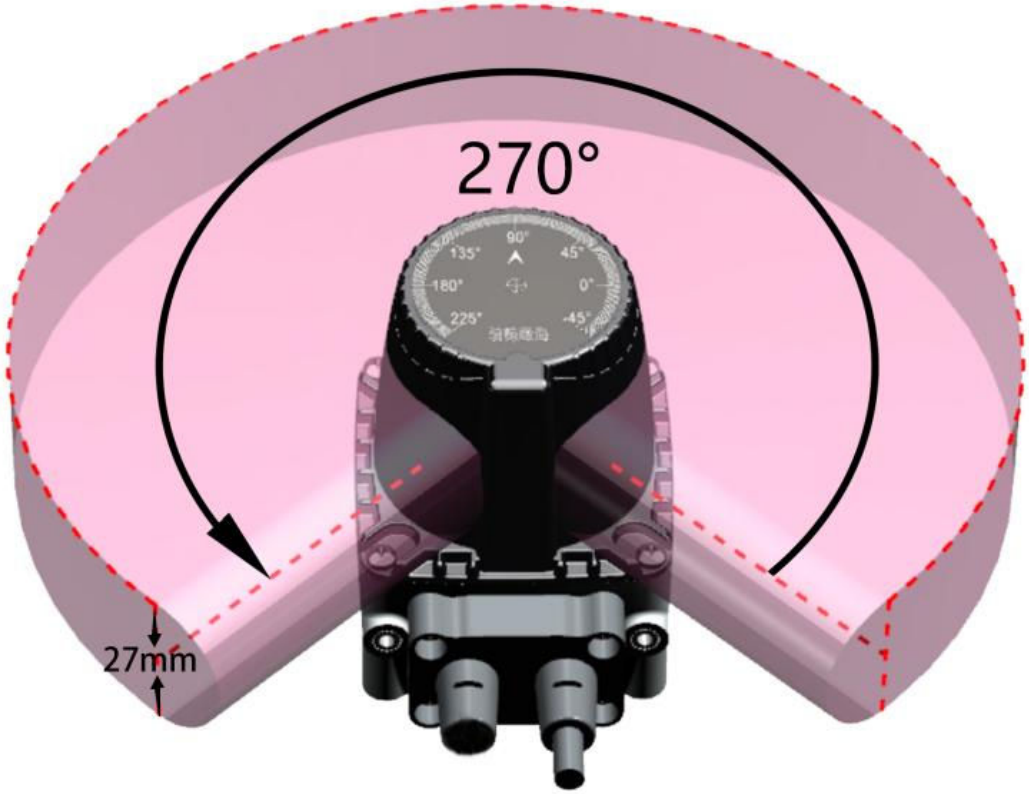

Note: During installation, ensure that there are no obstructions within the red area.

Figure 8 Scanning range diagram