骑鲸瞰海
QJKH

SH Safety Laser Scanner

Operation Manual

CCH Technology and Intelligence Co., Ltd

Contents

1. About This Document 4
1.1 Scope of Application 4
1.2 Target Audience 4
1.3 Document Icon Descriptions 4
1.4 Document Terminology 5
2. Product Introduction 7
2.1 Product Description 7
2.2 Specifications and Models 8
2.3 Appearance Information 8
2.4 Input/Output Interfaces 10
2.4.1 Connection Cable with Open Wire End 14
2.4.2 Network Interface Extension Cable with RJ45 Connector 17
3. Function Introduction 18
3.1 Working Principle 18
3.2 Zone Types 18
3.3 Safety Output 20
3.4 Static Input 21
3.5 Dynamic Input 21
3.6 General I/O 21
3.7 Application Scenarios 22
3.7.1 Fixed Hazardous Area Protection 22
3.7.2 Mobile Hazardous Area Protection 22
3.7.3 Hazardous Point Protection 23
4. PC Software Configuration 24
4.1 Connection Methods 24
4.2 Protective Zone + Warning Zone Mode Configuration 24
4.3 Dual Protective Zone Mode Configuration 25
4.4 Zone Set Switching 26
5. Technical Data 29
5.1 Dimensions 29
5.2 Parameter Table 31
6. Assembly 33
6.1 Installation Precautions 33
6.1.1 Response Time 33
6.1.2 Safety Distance 33
6.2 System Description 37
6.3 Wiring Precautions 37

6.4 Installation Environment 37
7. Inspection and Maintenance 40
7.1 Initial Inspection 40
7.2 Window Contamination Detection Cleaning and Replacement 41
7.2.1 Window Contamination Detection 41
7.2.2 Window Cleaning 42
7.2.3 Window Replacement 43
7.3 Daily Inspection 43
7.4 Routine Inspection 43
8. Troubleshooting Reference 44
9. Standards and Declarations 45
9.1 International Standards and Directives 45
9.2 Legal Statement and Liability 46
10. Version Information 47

1. About This Document

1.1 Scope of Application

This document applies to the following products:
Product Name: SH Safety Laser Scanner (hereinafter referred to as SH)

1.2 Target Audience

Certain chapters of this document are specifically intended for particular target groups. Table 1-1 helps target groups quickly locate the relevant chapters.

Table 1-1

Target Group	Chapters in This Document
Planning engineers, R&D personnel, designers	Chapter 3 Function Introduction Chapter 5 Technical Data
Installation personnel	Chapter 6 Assembly
Operating personnel	Chapter 4 Host Computer Configuration
Maintenance personnel	Chapter 7 Inspection and Maintenance Chapter 8 Troubleshooting Reference

1.3 Document Icon Descriptions

This document uses the following icons and conventions:

Safety warning sign: A hazardous situation that, if not prevented, may lead to severe injury or even death.

Key information notice: A potentially hazardous situation that, if not prevented, may lead to minor or moderate injury.

⚠ Warning

This is a safety warning sign; the content of the sign is very important.

Operators must strictly follow the safety information indicated by the sign to avoid possible personal injury.

▲ Notice

This is a key information notice; the content of the sign is important.

Operators must understand and strictly follow the content requirements to avoid unexpected safety incidents.

1.4 Document Terminology

AGV	Automated Guided Vehicle: A self-navigating vehicle.
ESPE	Electrosensitive Protective Equipment
OSSD	Output signal switching device: A signal output device of protective equipment used to stop hazardous motion.
PL	Performance Level (ISO 13849)
Type	Control system safety architecture level (EN 61496)
SIL	Safety Integrity Level (IEC 61508/IEC 61511)
Safety Output	The safety output outputs safety-related information. The OSSD of this product is the safety output.
Protective Zone	The protective zone is the area in which a test object is detected by the electrosensitive protective equipment (ESPE) as defined by the company. When the electrosensitive protective equipment detects an object in the protective zone, it switches the relevant safety output to the OFF state, for example, stopping a machine or vehicle.
Warning Zone	The warning zone is used to monitor a larger area than the protective zone. The warning zone can be used to trigger simple switching functions, for example, triggering a warning light or acoustic signal when a person approaches, before the person enters the protective zone.The warning zone must not be used for safety-related applications.
Static Control Input	The static control input uses differential input. The signal states of one or more static control inputs produce a unique signal pattern used for zone switching.
Dynamic Control Input	The dynamic control input is a single-channel control input. An incremental encoder can be connected to the dynamic control input to obtain the speed of the automated guided vehicle. Two control inputs can be combined to switch different zones based on different speeds.
Incremental Encoder	An incremental encoder generates electrical pulses in proportion to movement. Different physical quantities can be derived from these pulses to indicate speed or travel distance. E.g.: speed and travel distance
Zone Set	A zone set consists of one or more zones. The zones in a zone set are monitored simultaneously. A zone set can contain different zone types, such as a protective zone and a warning zone.

General I/O	The general I/O can be configured as a general input or general output.
General Output	The function of the general output can be configured as a warning output. Some ports can be configured as safety outputs.
General Input	The function of the general output can be configured as static input or dynamic input.
Hazardous Area	A hazardous area is an area where persons inside and/or around a machine may be exposed to danger.

2. Product Introduction

2.1 Product Description

The SH Safety Laser Scanner is an optical safety sensor that utilizes the diffuse reflection characteristics of pulsed lasers to determine objects entering a preset monitoring area. The rotating mirror assembly inside the scanner scans the monitoring area by emitting light pulses (the first object on the light transmission path reflects the light pulses). The distance from the sensor to the detected object is determined by measuring the time required for the light to return from the detected object.

▲ Notice

This product is Class 1 Laser

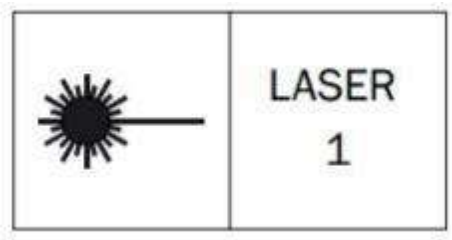

Figure 2-1 Class 1 Laser

Beam: Class 1 Laser Product

Using operating or calibration equipment other than that specified below or taking other actions may result in radiation hazard:

Only use the tools and auxiliary equipment specified in this document.

Strictly follow the operating procedures specified in this document.
Do not open the housing except for the installation and maintenance work specified in this document.

This device complies with the following standards:

IEC 60825-1:2014;

21 CFR 1040.10 and 1040.11, except as consistent with IEC 60825-1:2014, as described in Laser Notice No. 56 dated May 8, 2019. This laser is safe for human eyes.

2.2 Specifications and Models

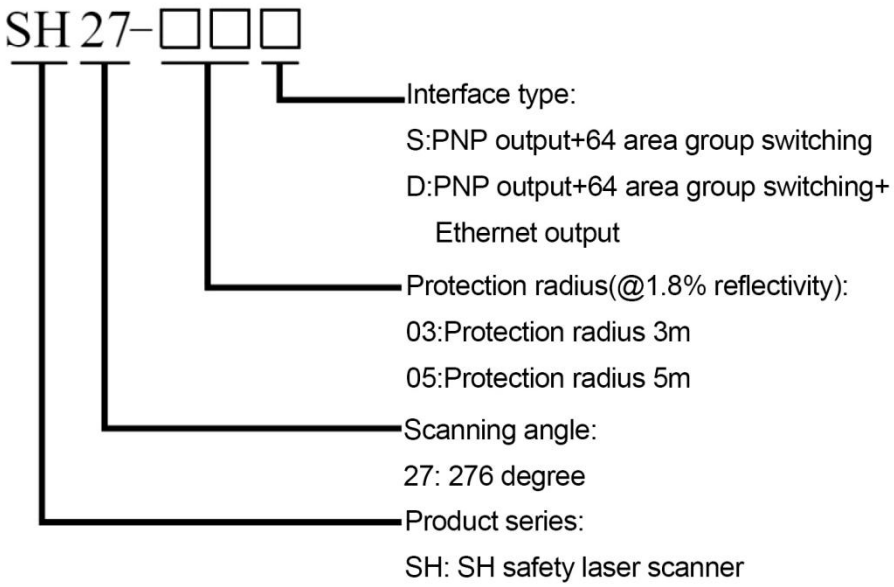

The differences between models lie in the protective radius and interface type.

The protective radius includes two options: 3m @ 1.8% reflectivity and 5m @1.8% reflectivity.

There are 2 interface types. S stands for PNP safety output, 64-zone set switching (connector: 17-pin aviation plug); D stands for PNP safety output + 64-zone set switching + Ethernet output (connector: 17-pin aviation plug + 5-pin aviation plug), where the Ethernet output (5-pin aviation plug) is a non-safety output.

2.3 Appearance Information

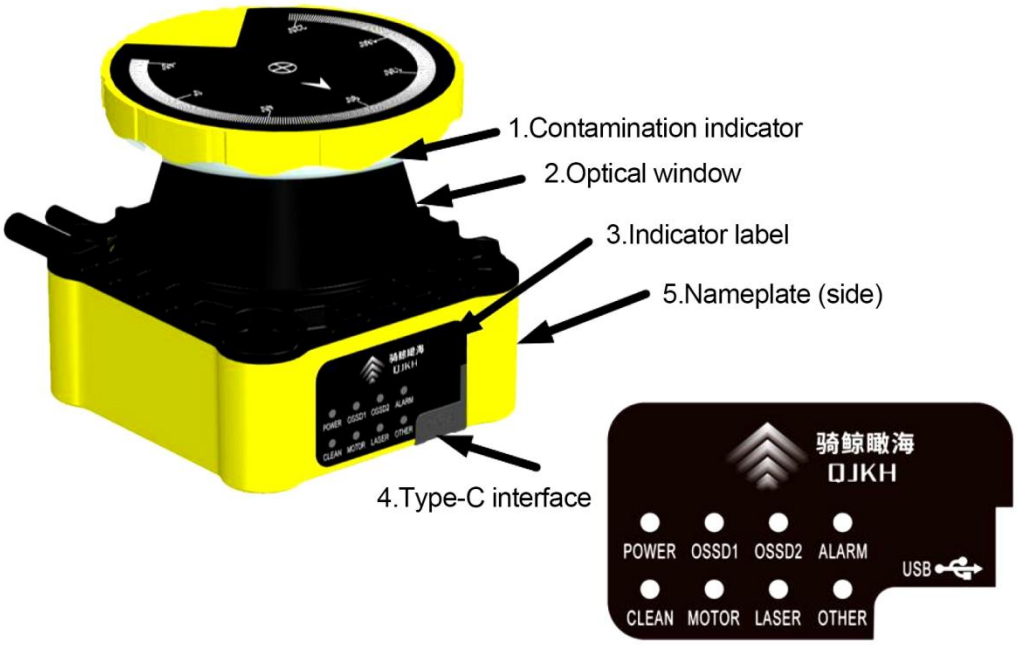

Figure 2-2 Appearance Information

Table 2-1 Appearance Information Description

No.	Component Name	Description
1	Contamination Indicator	Indicates the contamination level of the window
2	Optical Window	The detection beam of SH is emitted outward through the optical window, with a detection angle of 276°
3	Indicator Label	The indicator label contains eight indicators
4	Type-C Interface	The scanner connects to the configuration cable through this interface to establish a connection with the computer
5	Nameplate	Indicates the technical parameters related to SH

Table 2-2 Indicator Label Description

Indicator Label	Indicator Definition	Status	Description
POWER	Power Indicator	Green	Green light on after SH is powered on successfully
		Off	SH power-on failed
OSSD1	Safety Output 1 Indicator	Green	No object detected in Protective Zone 1, OSSD1 outputs ON state
		Red	Object detected in Protective Zone 1, OSSD1 outputs OFF state
OSSD2	Safety Output 2 Indicator	Green	Dual protective zone mode: No object detected in Protective Zone 2, OSSD2 outputs ON state
		Red	Dual protective zone mode: Object detected in Protective Zone 2, OSSD2 outputs OFF state
		Off	Protective zone + warning zone mode: Off
ALARM	Warning Output Indicator	Green	Protective zone + warning zone mode: No object detected in the warning zone
		Red	Protective zone + warning zone mode: Object detected in the warning zone
		Off	Dual protective zone mode: Off

CLEAN	Optical Window Status Indicator	Green	Optical window is clean
		Red	Optical window is severely contaminated
MOTOR	Motor Status Indicator	Green	The scanner motor is in normal operating state
		Red	The scanner motor has a fault
LASER	Laser Measurement Status Indicator	Green	The scanner laser measurement is in normal operating state
		Red	The scanner laser measurement has a fault
OTHER	Other Status Indicator	Green	The scanner is in normal operating state
		Red	The scanner has other operating faults
Contaminatio n Indicator	Window Contamination Status Indicator	Green	Window is clean
		Red	Window is severely contaminated and needs cleaning

2.4 Input/Output Interfaces

The SH power/output interface is an M12-17-pin male connector with a cable length of 0.3m. The network connection interface is an M12-4-pin female connector with a cable length of 0.3m.

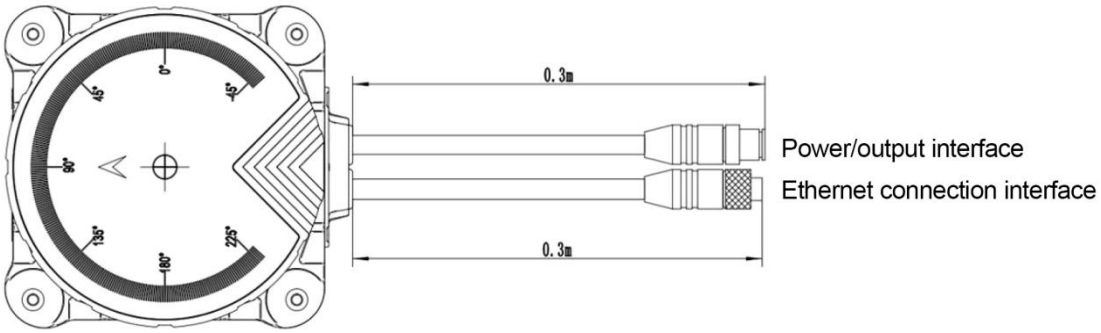

Figure 2-3 SH Connection Cables

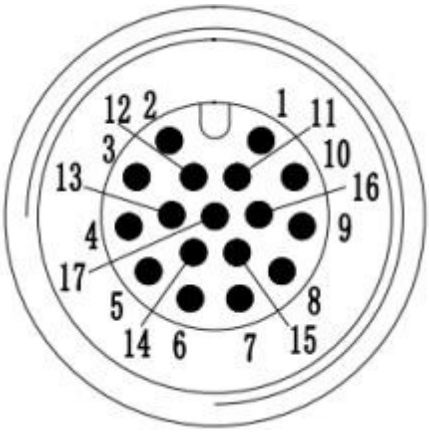

Figure 2-4 Power/Output Interface

Table 2-3 Power/Output Interface

Pin	Signal Definition	Signal Description	
1	DC24V	Operating voltage Vcc: DC 24V ± 20%	
2	0V		
3	OSSD1.A	Two independent PNP outputs, ON state: max IOUT = 100 mA, VOUT >= Vcc - 2V; OFF state: IOUT < 1 mA, VOUT < 2V. ON state when no object is in the protective zone; OFF state when an object or fault is present.	
4	OSSD1.B		
5	General I/O 1	General I/O 1, configurable: 1. Static control input B1; 2. Auxiliary output - Warning	1) When used as static control input, zone switching is achieved through changes in input signals A to F, input impedance 2.7K ohm; 2) When used as auxiliary output, PNP output, ON state: max IOUT = 100 mA, VOUT >= Vcc - 2V, OFF state: IOUT < 1 mA, VOUT < 2V.
6	General I/O 2	General I/O 2, configurable: 1. OSSD2.A (OSSD A in the second OSSD pair); 2. Static control input A1; 3. Auxiliary output - Warning	1) When used as OSSD output, two independent PNP outputs, ON state: max IOUT = 100mA, VOUT >=Vcc - 2V; OFF state: IOUT <1 mA, VOUT < 2V.

7	General I/O 3	General I/O 3, configurable: OSSD2.B (OSSD B in the second OSSD pair); 2. Static control input A2; 3. Auxiliary output - Warning	ON state when no object is in the protective zone; OFF state when an object or fault is present. 2) When used as static control input, zone switching is achieved through changes in input signals A to F, input impedance 2.7K ohm; 3) When used as auxiliary output, PNP output, ON state: max IOUT = 100 mA, VOUT >= Vcc - 2V, OFF state: IOUT < 1 mA, VOUT < 2V.

8	General I/O 4	General I/O 4, configurable: 1. Static control input B2; 2. Auxiliary output - Warning	Same as General I/O 1
9	Input 1	General Input 1, configurable: 1. Static control input C1; 2. Dynamic control input 1a (0°)	1) When used as static control input, zone switching is achieved through changes in input signals A to F, input impedance 2.7K ohm; 2) When used as dynamic control input, vehicle speed information is received from the incremental encoder through 1a/1b and 2a/2b input signals to achieve zone switching.
10	Input 2	General Input 2, configurable: 1. Static control input C2; 2. Dynamic control input 1b (90°)	
11	Input 3	General Input 3, configurable: 1. Static control input D1; 2. Dynamic control input 2a (0°)	
12	Input 4	General Input 4, configurable: 1. Static control input D2; 2. Dynamic control input 2b (90°)	
13	Input 5	General Input 5, configurable: 1. Static control input E1 2. Dynamic control input 3a (0°)	1) When used as static control input, zone switching is achieved through changes in input signals A to F, input impedance 2.7K ohm; 2) When used as dynamic control input, vehicle speed information is received from the incremental encoder through 3a/3b and 4a/4b input signals to achieve zone switching.
14	Input 6	General Input 6, configurable: 1. Static control input E2; 2. Dynamic control	

		input 3b (90°)	
15	Input 7	General Input 7, configurable: 1. Static control input F1 2. Dynamic control input 4a (0°)	
16	Input 8	General Input 8, configurable: 1. Static control input F2 2. Dynamic control input 4b (90°)	
17	/	/	

Network Interface	Pin	Signal Definition	Function
	1	TX+	Transmit Data+
	2	RX+	Receive Data+
	3	TX-	Transmit Data-
	4	RX-	Receive Data-

2.4.1 Connection Cable with Open Wire Ends

The standard cable length for the power/control interface extension cable is 1m. The wire colors and corresponding interface assignments are shown in Table 2-4.

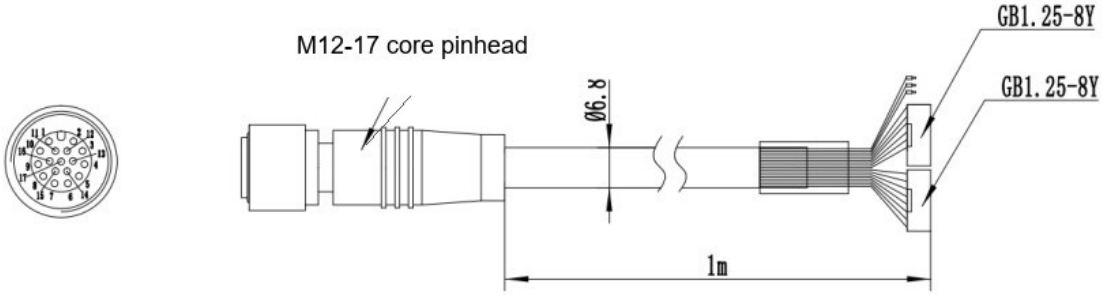

Figure 2-5 Power Interface Extension Cable

Table 2-4 Interface Assignment For Power/Control Interface Extension Cable With Open Wire Ends

Pin	Wire Color	Signal Definition	Function
1	Brown	24V	Operating voltage (+24V DC)
2	Blue	0V	Operating voltage (0V DC)
3	White	OSSD1.A	First OSSD pair, OSSD1.A

4	Green	OSSD1.B	First OSSD pair, OSSD1.B
5	Pink	General I/O 1	Configurable: Static control input: B1 General output: Warning output 1/Warning output 2
6	Yellow	General I/O_2	Configurable: Static control input: A1 General output: Warning output 1/Warning output 2/Second OSSD pair
7	Black	General I/O 3	Configurable: Static control input: A2 General output: Warning output 1/Warning output 2/Second OSSD pair
8	Grey	General I/O 4	Configurable: Static control input: B2 General output: Warning output 1/Warning output 2
9	Red	Input 1	Configurable: Static control input: C1 Dynamic control input: Encoder 1a (0°)
10	Purple	Input 2	Configurable: Static control input: C2 Dynamic control input: Encoder 1b (90°)
11	Grey-Pink	Input 3	Configurable: Static control input: D1 Dynamic control input: Encoder 2a (0°)
12	Red-Blue	Input 4	Configurable: Static control input: D2 Dynamic control input: Encoder 2b (90°)
13	White-Green	Input 5	Configurable: Static control input: E1 Dynamic control input: Encoder 3a (0°)
14	Brown-Green	Input 6	Configurable: Static control input: E2

			Dynamic control input: Encoder 3b (90°)
15	White-Yellow	Input 7	Configurable: Static control input: F1 Dynamic control input: Encoder 4a (0°)
16	Yellow-Brown	Input 8	Configurable: Static control input: F2 Dynamic control input: Encoder 4b (90°)
17	White-Grey	/	/

2.4.2 Network Interface Extension Cable with RJ45 Connector

The network interface extension cable is a 4-core industrial network connection cable with an M12-4-pin male connector on one end and an RJ45 connector on the other end. The standard cable length is 1m.

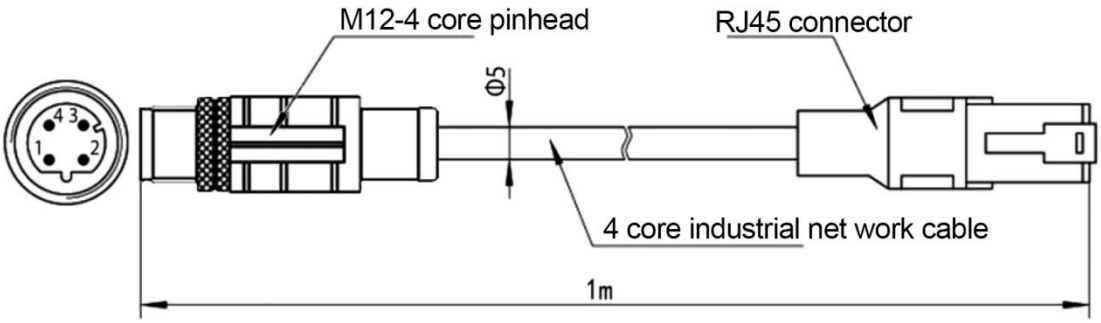

Figure 2-6 Network Interface Extension Cable

3. Function Introduction

3.1 Working Principle

The SH Safety Laser Scanner is an electrosensitive protective equipment (ESPE). Based on the laser distance measurement principle, it achieves two-dimensional area protection through rotational scanning.

The laser distance measurement principle is based on the measurement of time of flight: the scanner emits light pulses at uniform and very short intervals, and the light is reflected back by objects and received by the scanner. Through the time difference (Δt) between the emission and reception time points, the scanner can calculate the distance to the object, achieving precise detection of the target position.

The Laser Scanner is an electrosensitive protective equipment (ESPE). Based on the laser distance measurement principle, it achieves two-dimensional area protection through rotational scanning.

The laser distance measurement principle is based on the measurement of time of flight: the scanner emits light pulses at uniform and very short intervals, and the light is reflected back by objects and received by the scanner. Through the time difference (Δt) between the emission and reception time points, the scanner can calculate the distance to the object, achieving precise detection of the target position.

3.2 Zone Types

The safety laser scanner uses a laser beam during operation to continuously check whether persons are present or objects in one or more zones. As described in Table 3-1, the range to be checked is called a "zone". Depending on the application type, the following zone types are distinguished:

• Protective zone

• Warning zone

SH has two protection modes. The default is protective zone + warning zone mode, as shown in Figure 3-1.

To configure two independent protective zones, SH can be configured through the host computer in dual protective zone mode as shown in Figure 3-2.

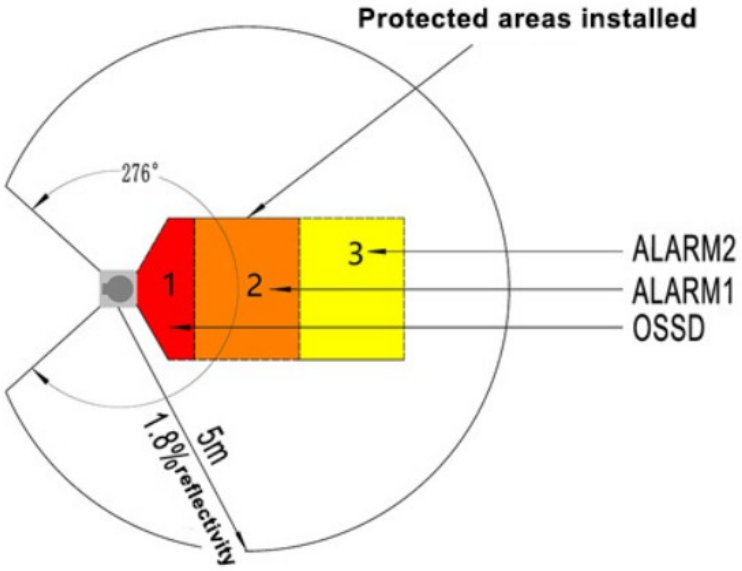

Figure 3-1 Protective Zone + Warning Zone Mode

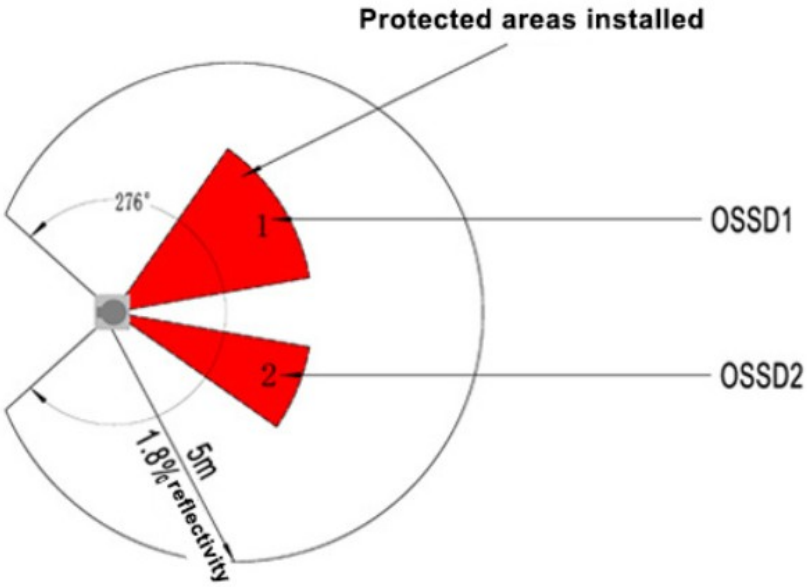

Figure 3-2 Dual Protective Zone Mode

Table 3-1 Indicator Label Description

	Protective Zone	Warning Zone
Safety Shutdown	Yes (PL d)	No
Maximum Scanning Range of Safety Scanner	3m/5m	10m/20m
Purpose of Use	Detect and protect persons	Functional use (non-safety-related application)
Description	When an obstacle is detected within the set protective zone, the output signal switching devices (OSSDs) enter the OFF state	When an obstacle is detected within the set warning zone, the auxiliary output (configured as warning output) enters the OFF state

3.3 Safety Output

When no object is detected in the protective zone, the OSSD outputs an ON signal, and the monitored equipment operates normally.

When an object is detected in the protective zone or a scanner fault occurs, the OSSDs are in the OFF state, and the monitored equipment stops operating. The OFF state signal of the output cycle is shown in Figure 3-3:

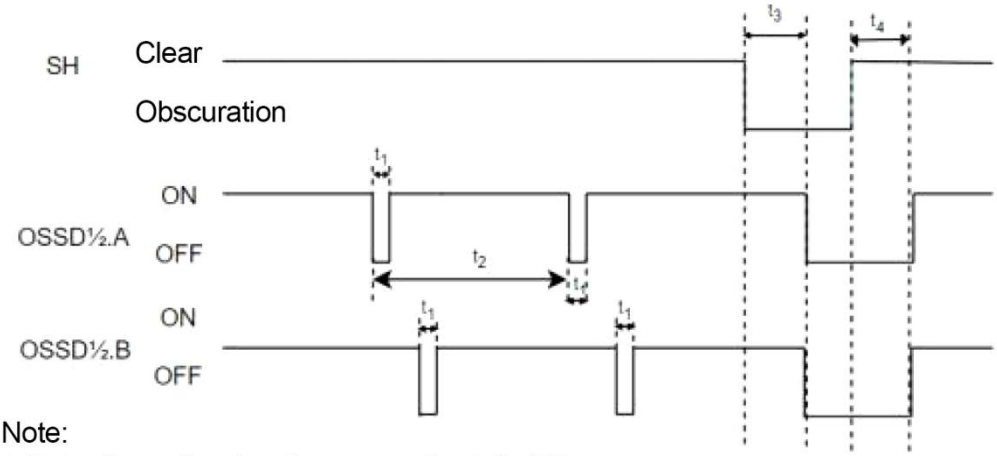

Note:

t_1:Detection pulse duration, approximately 200us;

t_2:Detection pulse cycle: time for one complete scanner rotation, 40 ms;

t_3:Obscuration response time, minimum 100 ms (configurable);

t_4:Obscuration recovery time, minimum 300 ms (configurable).

Figure 3-3 OSSD Status Diagram

3.4 Static Input

The static control input adopts a redundant complementary method, with dual-channel inversion to switch the state of the static control input.
To define the logic input states 1 and 0 on the corresponding control input, the channel states of the static control input are shown in Table 3-2. (The definitions for inputs B to F are the same as for A.)

Table 3-2 Channel States of Static Control Input

A1	A2	Logic Input State (Input A)
0	1	1
1	0	0
0	0	Fault
1	1	Fault

3.5 Dynamic Input

The dynamic control input receives vehicle speed information from incremental encoders through (1a/1b; 2a/2b) and (3a/3b; 4a/4b) input signals, compares it with the speed information set in the scanner, and switches zone sets based on the comparison results.

Additional requirements for the incremental encoder:

Dual-channel encoder with 90° phase difference

Output: Push-pull

Shielded cable

Maximum pulse frequency: 200 kHz

Minimum pulse count: 100 pulses per centimeter

Connection to the incremental encoder:

The speed information from each incremental encoder can only be transmitted to one safety laser scanner.

To obtain accurate speed information, the scanner must simultaneously monitor 2 or 4 incremental encoders. The incremental encoder must have one 0° output and one 90° output, connected to only one control input.

3.6 General I/O

The general I/O can be configured as general input/output. In addition, the general I/O ports on pins 6 and 7 can be used in pairs as OSSD2 pair, serving as the control output for an independent protective zone.

The inputs can be used for static control input or dynamic control input depending on the device configuration.

When the general I/O is configured as an output (warning output), it must not be used for safety-related applications.

3.7 Application Scenarios

3.7.1 Fixed Hazardous Area Protection

SH establishes a definable protective zone through an invisible laser beam, which can protect fixed hazardous areas and prevent persons or objects from entering the hazardous area and being injured.

The protective zone can be customized within a fan-shaped area with a maximum radius of 5 meters (depending on the model) and 276 degrees according to actual requirements. Once the scanner is configured with the actual required protective zone range, the scanner is powered on and starts normal operation. If no object is detected in the protective zone, the output signal switching device OSSD(s) of SH is in the ON state, and the protected equipment in the protective zone operates normally; if an object is detected in the protective zone, the OSSD(s) output of SH enters the OFF state, controlling the safe shutdown of the protected equipment, achieving intrusion safety protection.

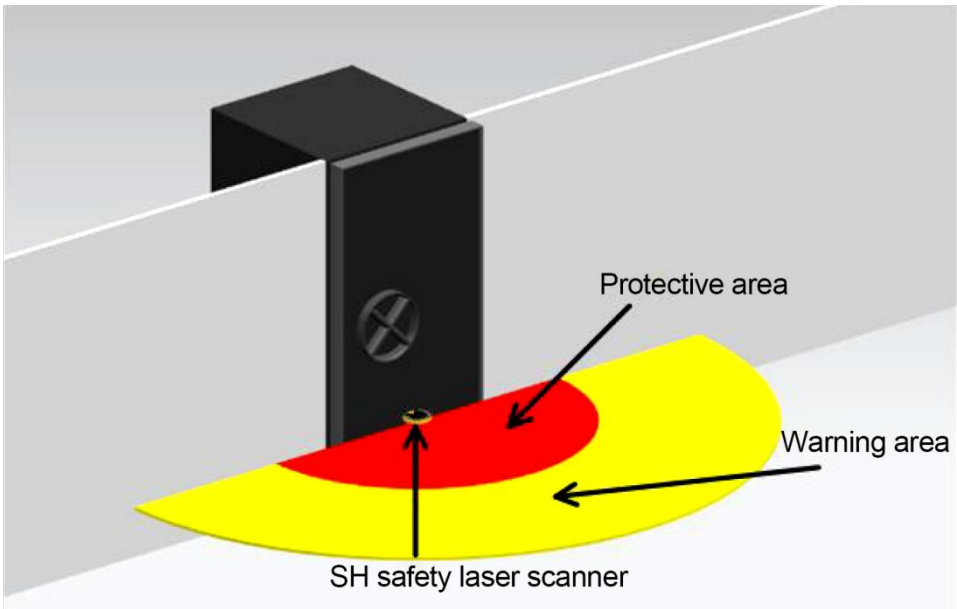

Figure 3-4 Fixed Hazardous Area Protection

3.7.2 Mobile Hazardous Area Protection

SH can be installed on mobile equipment to achieve hazardous area protection, such as automated guided vehicles (AGVs) and forklifts.

During travel, SH can monitor the area in the direction of travel in real time through an invisible laser beam. When an object is detected in the protective zone, the OSSD(s) output of SH enters the OFF state within the response time, controlling the vehicle to stop.

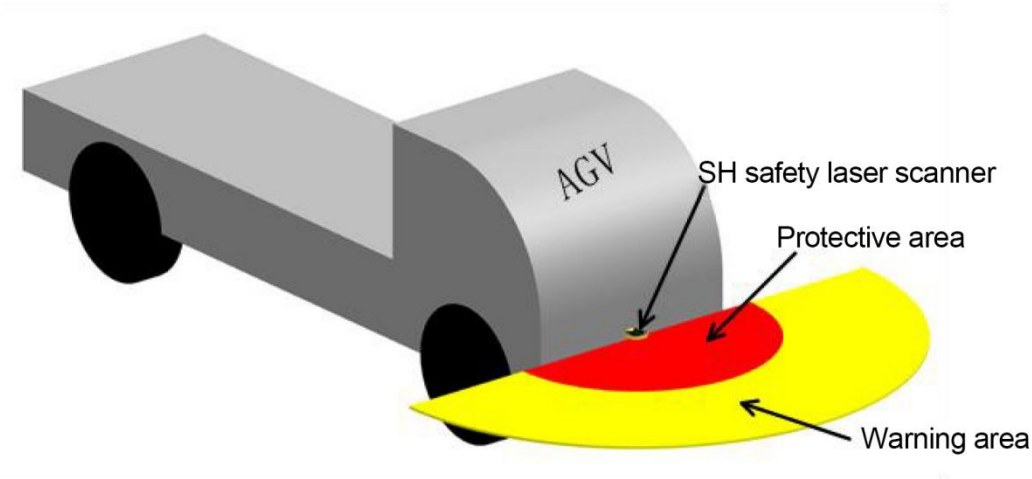

Figure 3-5 Mobile Hazardous Area Protection

3.7.3 Hazardous Point Protection

In hazardous point protection, approaching behavior near the hazardous point is detected. When any object approaching the hazardous point is detected, the safety output signal of SH enters the OFF state, controlling the safe shutdown of the protected equipment.

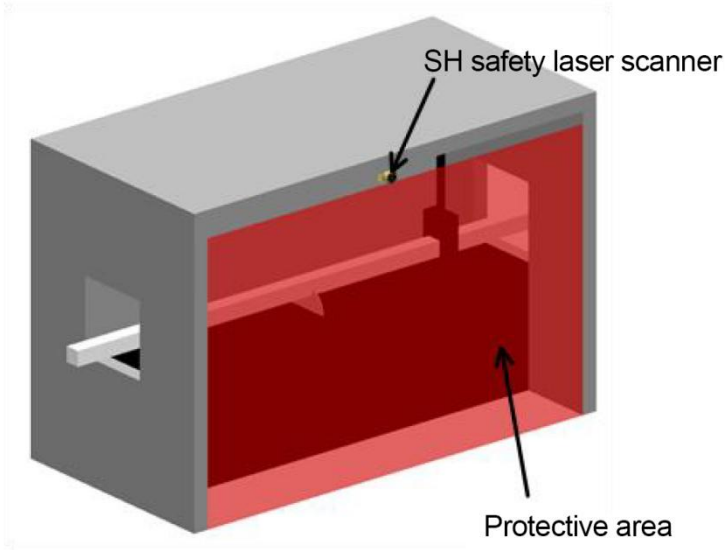

Figure 3-6 Hazardous Point Protection

4. PC Software Configuration

▲ Notice

· Please read this document thoroughly before performing PC software configuration.

· PC software configuration should be performed under the guidance of professionals.

4.1 Connection Methods

Depending on the model, SH has two ways to connect to the host computer software.

S type: Can be connected to a computer via the front USB Type-C interface for zone and other parameter configuration.

D type: Can be connected to a computer via the front USB Type-C interface or the rear Ethernet port for zone and other parameter configuration.

4.2 Protective Zone + Warning Zone Mode Configuration

The system preset protective zone group operates in protective zone + warning zone mode, which contains one protective zone and two warning zones (Warning Zone 1 and Warning Zone 2). Users can use the configuration tool to designate any two of the general I/O ports 05-08 as ALARM1 and ALARM2 signal channels. In this configuration state, the monitoring output signal of OSSD pair 2 is no longer assigned to the general I/O ports.

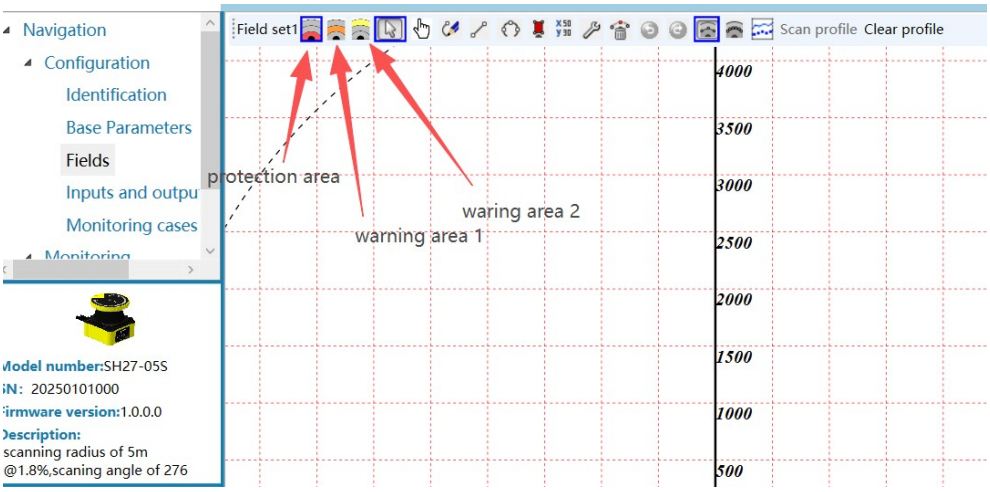

Figure 4-1 Zone Settings for Protective Zone + Warning Zone Mode

When operating in protective zone + warning zone mode, the zone settings module in the operation interface will dynamically display three configuration units: "Protective Zone", "Warning Zone 1", and "Warning Zone 2". Click the corresponding function module to enter the configuration interface for each zone. The specific operation process is detailed in the work panel diagram shown in Figure 4-1.

4.3 Dual Protective Zone Mode Configuration

When dual-zone independent protection is required, the operator can designate pins 06 and 07 as the second OSSD signal output channel through the [Local Input/Output] configuration interface. After this configuration takes effect, the protective zone group operating mode will automatically switch from protective zone + warning zone mode to dual protective zone mode. In this mode, each zone set consists of two independent zones (Zone 1 and Zone 2).

In the dual protective zone mode operating state, the interactive controls of the [Zone Settings] function panel will be updated to Zone 1 and Zone 2. Click the corresponding function unit to enter the independent parameter configuration interface for each zone. The specific layout logic and operation path are detailed in the system configuration flowchart shown in Figure 4-2.

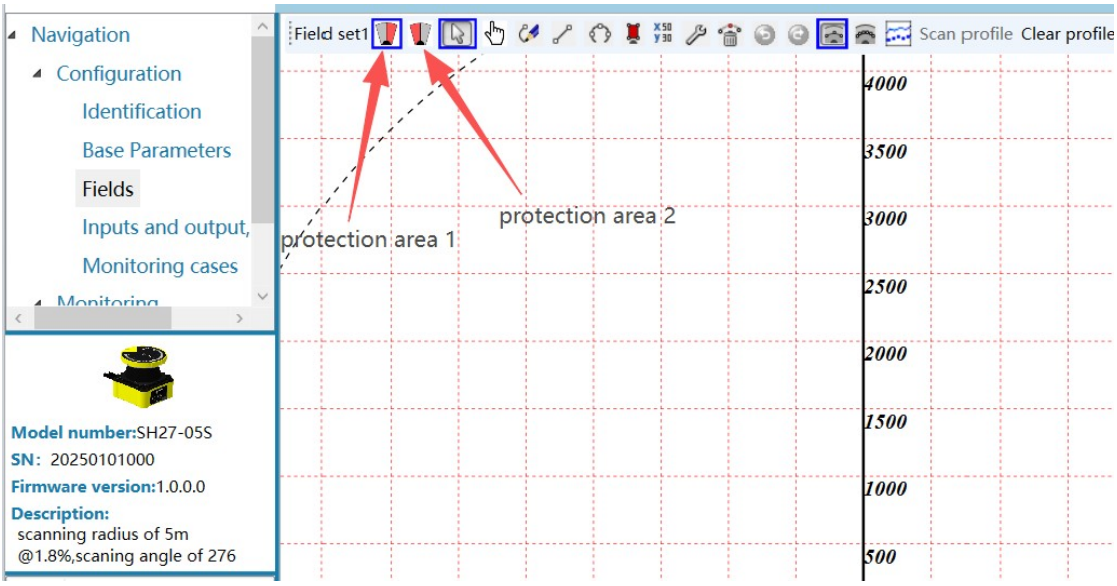

Figure 4-2 Zone Settings for Dual Protective Zone Mode

▲ Notice

The original warning zone (Warning Zone 1 and Warning Zone 2) configurations will be cleared when the protective zone group mode switches from protective zone + warning zone mode to dual protective zone mode.

When the protective zone group mode switches from dual protective zone mode to protective zone + warning zone mode, the original Protective Zone 2 configuration will be cleared.

4.4 Zone Set Switching

The SH system supports up to 64 zone sets of different shapes. Users can assign each zone set to the require [Monitoring Instance] according to their needs, and set the corresponding trigger conditions. When the conditions are met, the system will automatically execute the zone set switching operation.
The SH system provides two methods for zone set switching: static control input and dynamic control input. The configuration interface is shown in Figure 4-3

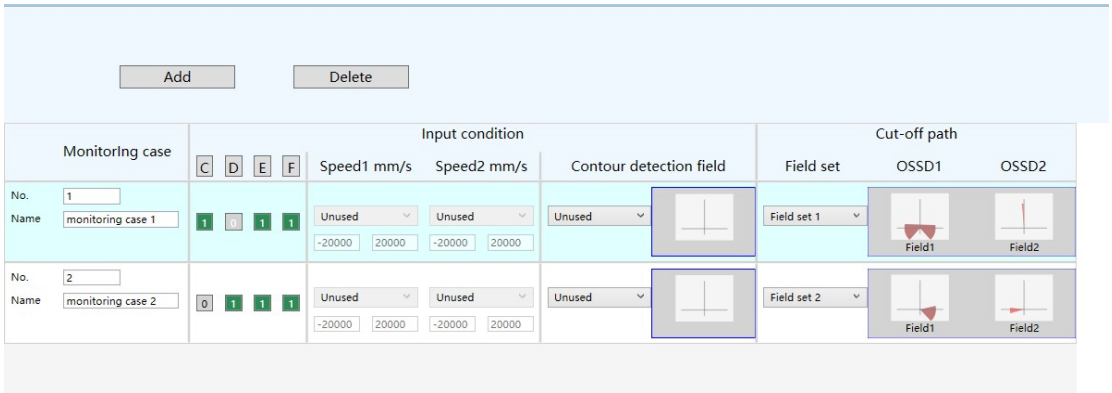

Figure 4-3 Monitoring Instance

Add/Delete monitoring instance

Monitoring instance naming

Static control input conditions

Dynamic control input conditions

Zone set assignment

Static control input corresponds to the level state detection of static monitoring ports, achieving logic judgment by reading the stable level signals of preset I/O ports; dynamic control input monitoring is configured as the speed value signal of the incremental encoder input port.

Switching Zone Sets via Static Control Input

The static control input configuration area contains 6 configuration items, corresponding one-to-one to ports A-F in the [Local Input/Output] interface. Configuration items for unused ports are automatically disabled. The system executes the associated zone set activation operation only when the actual input signal exactly matches the preset state. The configuration options provide three logic states: "0", "1", and "" (disabled). Refer to Figure 4-4 for static control input configuration.

Pin	Optiona signals	Assigned signals	Sign type	Line color
1	DC 24V	DC 24V	/	Brown
2	DC 0V	DC 0V	/	Blue
3	OSSD1.A	OSSD1.A	Output	White
4	OSSD1.B	OSSD1.B	Output	Green
6	OSSD2.A|A1|Alarm	Static input A1	Input	Yellow
7	OSSD2.B|A2|Alarm	Static input A2	Input	Black
5	B1|Alarm	Static input B1	Input	Pink
8	B2|Alarm	Static input B2	Input	Gray
9	C1|Ecoder 1 (0°)	Static input C1	Input	Red
10	C2|Ecoder 1 (90°)	Static input C2	Input	Purple
11	D1|Ecoder 2 (0°)	Static input D1	Input	Gray/Pink
12	D2|Ecoder 2 (90°)	Static input D2	Input	Red/Blue
13	E1|Ecoder 3 (0°)	Static input E1	Input	White/Green
14	E2|Ecoder 3 (90°)	Static input E2	Input	Brown/Green
15	F1|Ecoder 4 (0°)	Static input F1	Input	White/Yellow
16	F2|Ecoder 4 (90°)	Static input F2	Input	Yellow/Brown
17	NC	NC	/	White/Gray

Figure 4-4 Static Control Input Configuration

Example:

The static input condition for activating Zone Set 1 requires the level signals of static control input ports A to F to be "110100". The configuration can be set as shown in Figure 4-5.

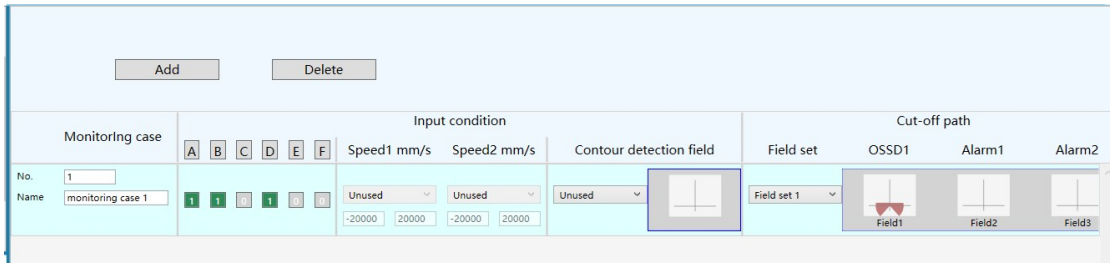

Figure 4-5 Static Control Input Configuration Example

Switching Zone Sets via Dynamic Control Input

The dynamic control input configuration uses a four-channel binding mechanism: Input 01-04 form the first signal group, and Input 05-08 form the second signal group. When any interface is designated as an encoder input channel, the interfaces within its group are automatically bound as encoder channels. Among them, Input 01/02 correspond to Encoder 1, Input 03/04 correspond to Encoder 2; Input 05/06 correspond to Encoder 3, and Input 07/08 correspond to Encoder 4.

The logic rule for speed parameters is: when the Encoder 1/2 channel group configuration is complete, the system automatically enables Speed 1 monitoring; after the Encoder 3/4 channel group is configured, Speed 2 monitoring is activated. The workflow of this logical relationship is detailed in the system architecture diagram Figure 4-6.

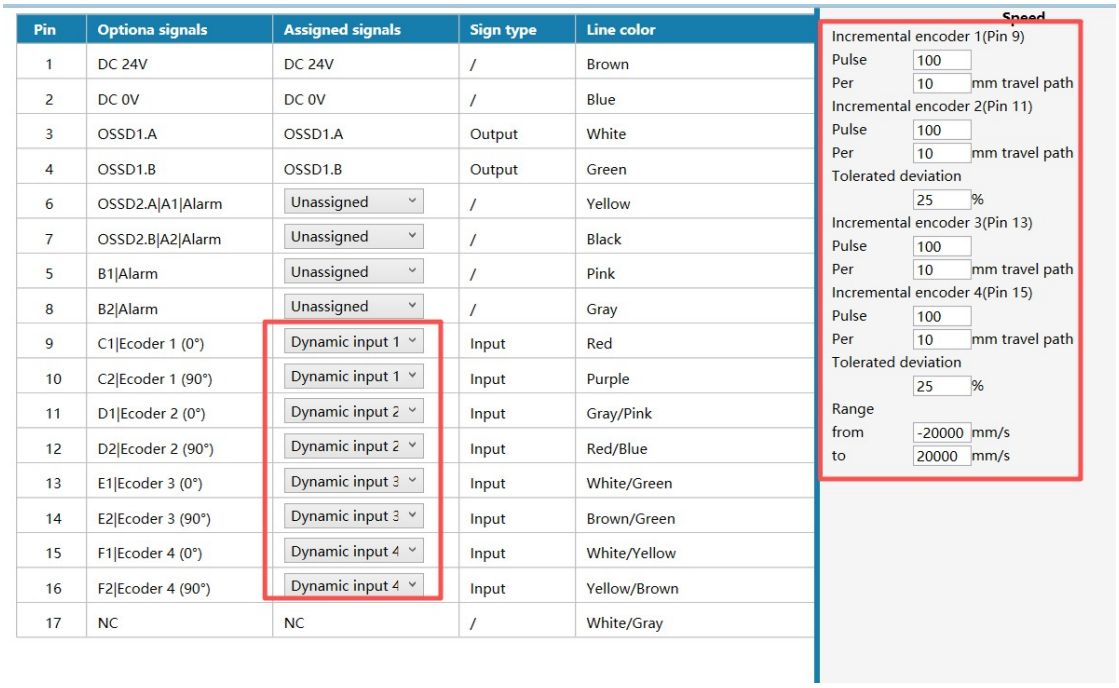

Pin	Optiona signals	Assigned signals	Sign type	Line color
1	DC 24V	DC 24V	/	Brown
2	DC 0V	DC 0V	/	Blue
3	OSSD1.A	OSSD1.A	Output	White
4	OSSD1.B	OSSD1.B	Output	Green
6	OSSD2.A|A1|Alarm	Unassigned	/	Yellow
7	OSSD2.B|A2|Alarm	Unassigned	/	Black
5	B1|Alarm	Unassigned	/	Pink
8	B2|Alarm	Unassigned	/	Gray
9	C1|Ecoder 1 (0°)	Dynamic input 1	Input	Red
10	C2|Ecoder 1 (90°)	Dynamic input 1	Input	Purple
11	D1|Ecoder 2 (0°)	Dynamic input 2	Input	Gray/Pink
12	D2|Ecoder 2 (90°)	Dynamic input 2	Input	Red/Blue
13	E1|Ecoder 3 (0°)	Dynamic input 3	Input	White/Green
14	E2|Ecoder 3 (90°)	Dynamic input 3	Input	Brown/Green
15	F1|Ecoder 4 (0°)	Dynamic input 4	Input	White/Yellow
16	F2|Ecoder 4 (90°)	Dynamic input 4	Input	Yellow/Brown
17	NC	NC	/	White/Gray

Figure 4-6 Logic Input States of Dynamic Control Input

Example:

The dynamic control input conditions for activating Zone Set 1 require Speed 1 to be in the range of -2000 to 1000 mm/s, and Speed 2 to be in the range of 1000 to 2000 mm/s. The configuration can be set as shown in Figure 4-7.

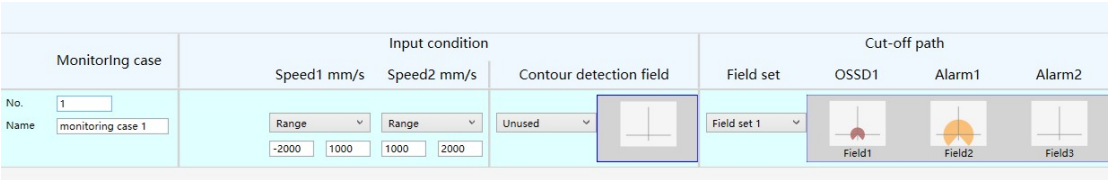

Figure 4-7 Dynamic Control Input Configuration Example

▲ Notice

When configuring encoder signals in the [Local Input/Output] interface, the speed pulse parameter definition must be completed simultaneously. The system automatically generates the reference speed threshold based on the minimum speed parameters of the configured incremental encoder, which will directly affect the real-time speed determination interval of the monitoring module. Operators can customize the threshold range, but must ensure it is within the allowable working range defined by the encoder pulse parameters.

5. Technical Data

5.1 Dimensions

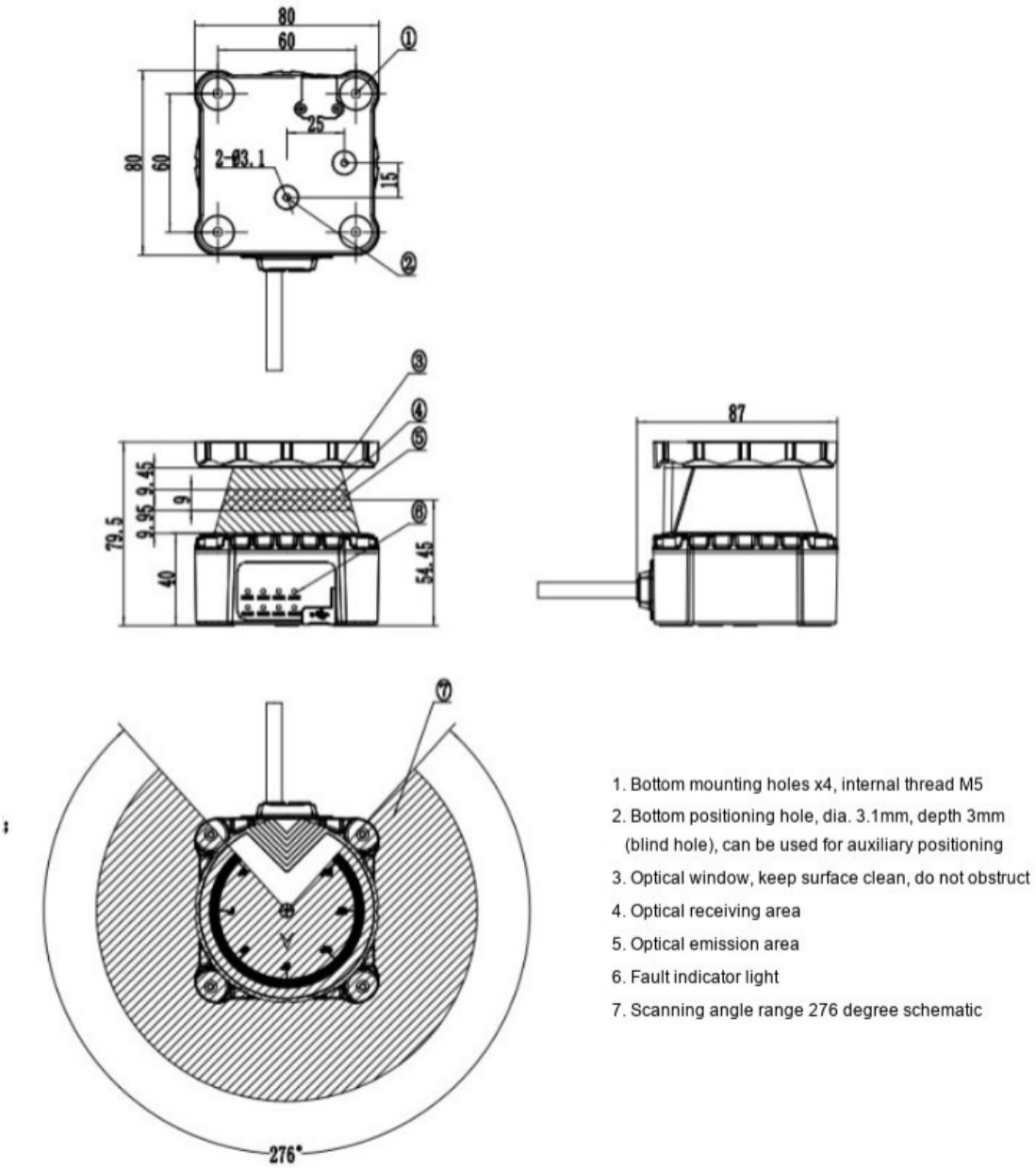

1. Bottom mounting holes x4, internal thread M5
2. Bottom positioning hole, dia. 3.1mm, depth 3mm (blind hole), can be used for auxiliary positioning
3. Optical window, keep surface clean, do not obstruct
4. Optical receiving area
5. Optical emission area
6. Fault indicator light
7. Scanning angle range 276 degree schematic

Figure 5-1 Dimensions and Scanning Range Diagram

5.2 Parameter Table

Table 5-1 Safety-Related Characteristic Parameters

Type	Type 3 (IEC 61496)
Safety Integrity Level	SIL 2 (IEC 61508)
Category	Cat. 3 (ISO 13849)
Performance Level	PL d (ISO 13849)

Table 5-2 Functional Parameters

Model	SH27-03S SH27-03D	SH27-05S SH27-05D
Laser Source	Wavelength 905 nm, Class 1 laser product	
Maximum Protective Radius	3m @ 1.8% reflectivity	5m @ 1.8% reflectivity
Warning Zone Radius	10m	20m
Scanning Angle Range	276°	
Angular Resolution	0.1°	
Response Time 1)	Default 100 ms (configurable)	
Object Resolution (Detection Capability)	70 mm @ maximum protective zone radius	
Tolerance Zone (TZ = tolerance range of the safety laser scanner)	65 mm	
Extension Distance ZR 2)	350 mm	
Operating Voltage	DC 24V ± 20%	
Power-on Start Time	10 s (typical value)	
Refresh Rate	30 Hz	
Power Consumption	< 5 W (no load)	
Interface Type	S series: PNP D series: PNP + Ethernet	
Safety Output (OSSD)	PNP output (ON state: max IOUT = 100 mA, VOUT≥ VCC - 2V; OFF	

	state: IOUT < 1 mA, VOUT < 2V), overcurrent protection, capacitive load ≤1 uF. When no object is in the protective zone, ON state; OFF state when an object or fault is present.
Auxiliary Output	PNP output, max IOUT = 100 mA, VOUT >= VCC - 2V, OFF state: IOUT <1 mA, VOUT < 2V), overcurrent protection
Overall Dimensions	80 mm x 80 mm x 79.5 mm
Housing Color	Yellow
Ambient Temperature	Operating: -10°C to 50°C (no frost or condensation); Storage: -40°C to 70°C
Ambient Humidity	Operating: 35% RH to 95% RH; Storage: 35% RH to 95% RH
Ambient Light Interference (Incandescent Lamp)	3000 lux
Shock Resistance	Acceleration 10 g; pulse duration: 16 ms; Number of shocks: three axes, 1000 ± 10 per axis 5M1 (IEC 60721-3-5) sine: 1.5 mm, 5 to 200 Hz
Vibration Resistance	Frequency 10 Hz to 55 Hz; amplitude: 0.35 ± 0.05 mm; Number of sweeps: three axes, 20 per axis 5M1 (IEC 60721-3-5) sine: 1.5 mm, 2 to 9 Hz
Protection Rating	IP65
Electromagnetic Compatibility (EMC)	EN61326-1:2013 EN61000-4-2:2009 EN61000-4-3:2006+A1:2008+A2:2010 E N61000-4-4:2004+A1:2010 EN61000-4-6:2014 EN61000-4-8:2010

1) The response time is configurable, see Section 6.1.1.

2) The extension distance ZR is for measurement errors caused by reflection. If a retro reflector is located near the protective equipment (distance between the retro reflector and the protective zone ≤ 6 m), the extension distance must be considered. Extension distance ZR = 350 mm.

3) OSSDs are output in pairs. In this document, OSSD1.A and OSSD1.B form one OSSD pair, and OSSD2.A and OSSD2.B form another OSSD pair. OSSD(s) in this document refers to one or two OSSD pairs (configurable via pins).

6. Assembly

▲ Notice

· Please read this document thoroughly before performing assembly.

· Assembly should be performed under the guidance of professionals.

6.1 Installation Precautions

6.1.1 Response Time

The response time of the protective equipment is the maximum time between the occurrence of an event that causes the sensor to respond and the provision of a shutdown signal to the protective equipment interface (e.g., OSSD pair OFF state).

The response time of SH depends on the set sampling period. The response time can be calculated using the following formula:

$$tR = n \times (m + 1)$$

• tR = Response time

• n = Set scan period

• m = Set number of scans

The scan period is determined by the motor speed, with a default of 30 Hz, corresponding to a scan period of (1000/30) ms = 34 ms.

Users can configure the response time by setting the number of scans. The setting range is 100 ms to 567 ms, corresponding to 2 to 16 scans.

Number of Scans	2	3	4	5	6	7	8	9	10	11	12	13	14	15	16
Response Time(ms)	100	134	167	200	234	267	300	334	367	400	434	467	500	534	567

A shorter response time can reduce the safety distance.

A longer response time increases the number of scans. Under conditions of light environment fluctuations or transient object intrusion, SH can continuously maintain the safety output state (ON), avoiding unnecessary shutdown responses in the protective zone.

6.1.2 Safety Distance

The safety distance varies depending on the specified minimum detectable object and response time. The protective zone setting should be based on the minimum safety distance calculated in accordance with the laws, regulations, and standards of the relevant country or region.

▲ Notice
If there is a retroreflector near the safety laser scanner, the additional distance ZR = 350 mm must be considered when calculating the safety distance.

Safety Distance for Fixed Protective Zone Protection

An example of calculating the minimum safety distance S according to the standard ISO 13855 is shown in Figure 6-1.

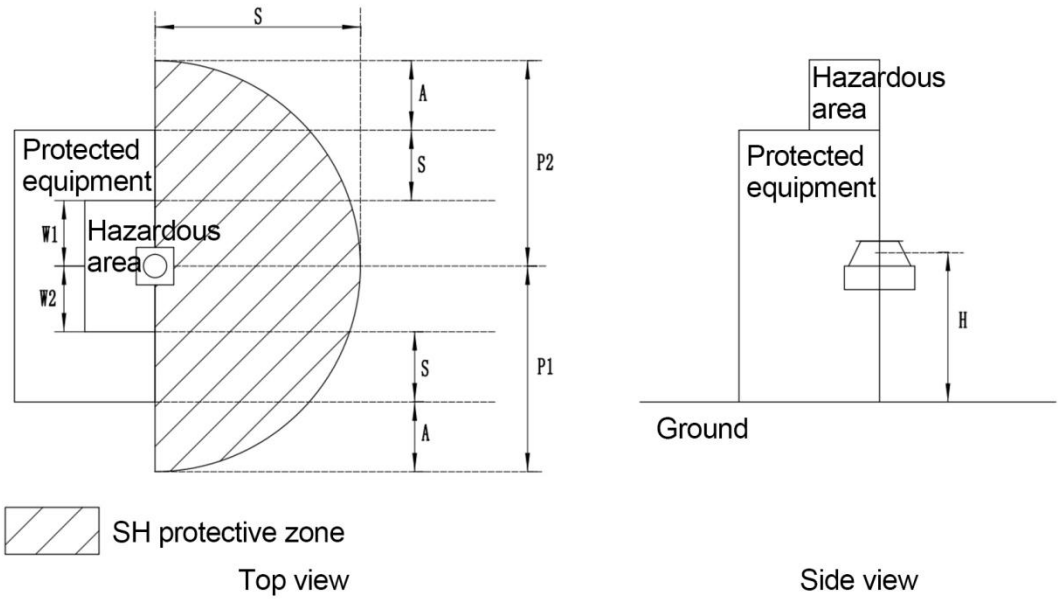

Figure 6-1 Safety Distance Calculation for Fixed Protective Zone Protection

S = K×T + C + TZ + ZR

● S: Safety distance (mm)

● K: Speed of object intruding into the protective zone (mm/s); K=1600 mm/s

● T: Total response time (t1+t2)(s)

t1: SH response time (s)

t2: Time required for the monitored equipment to stop after receiving the OSSD signal from SH (s)

● C: Additional distance to prevent reaching above the detection plane. When there is sufficient space in front of the hazardous area, use C=1200 mm;

If the minimum distance needs to be as small as possible, use the formula C=1200-0.4 x H (C >= 850 mm).

● H: Height of the detection plane from the reference plane (mm)

1000 mm >= H >= 15 × (d-50) mm

d: Minimum detectable object size of SH (mm)

When the calculated result is C >= 850 mm, use the calculated value as the additional distance.

When the calculated result is C < 850 mm, use C=850 mm.

● TZ: Additional distance for the tolerance zone of the safety scanner (mm), TZ=65 mm

● ZR: Additional distance for measurement errors based on reflection (mm), ZR=350 mm

● P1, P2: Protective distances to be set as the protective zone

● W1, W2: Width of the hazardous area

Safety Distance for Mobile Protective Zone Protection

The calculation method for the safety distance (protective zone length) can be referenced below:

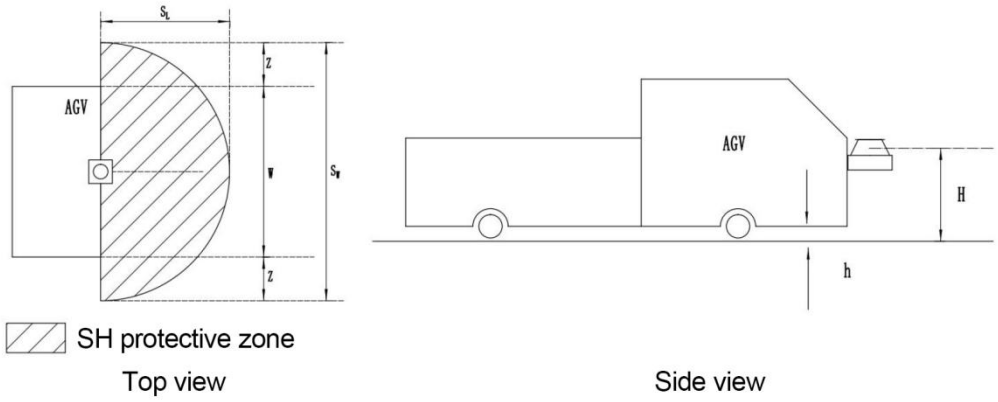

Figure 6-2 Safety Distance Calculation for Mobile Protective Zone Protection

SL = V × T + SB × L + TZ + ZF

● SL: Minimum safety distance (mm)

● V: Maximum AGV speed (mm/s)

● T: Total response time (t1+ t2) (s)

t1: SH response time (s)

t2: AGV response time (s)

● SB: Braking distance of the AGV (mm)

● L: Safety factor for AGV braking distance (based on brake wear)

● TZ: Additional distance for the tolerance zone of the safety scanner (mm)

● ZF: Additional necessary distance regarding h, if h is insufficient

h: Clearance between the reference plane (ground) and the bottom of the AGV. If h is insufficient, feet may extend under the AGV or SH, causing danger. The total extension distance for h below 120 mm is 150 mm. This extension distance can be further reduced in individual cases, see Figure 6-3.

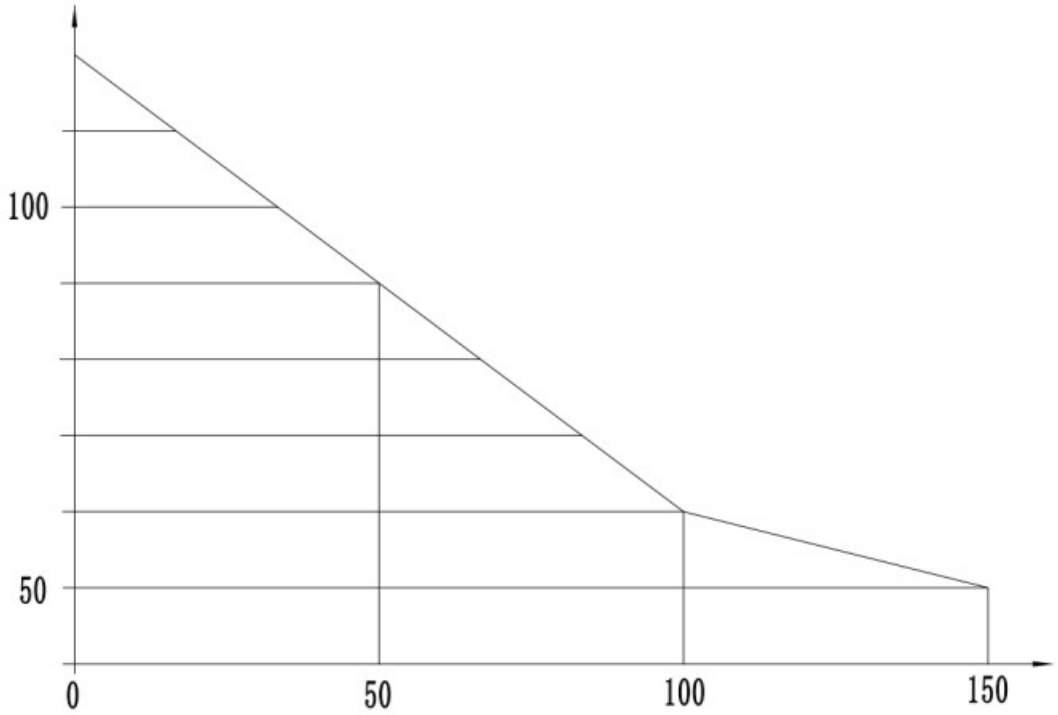

Calculation method for protective zone width (reference):

SW = W + 2 × (TZ + ZF + ZR)

● SW: Protective zone width

● W: Width of the AGV

● TZ: Additional distance for the tolerance zone of the safety scanner (mm), TZ=65 mm

● ZF: Additional necessary distance regarding h, if h is insufficient

● ZR: Additional distance for measurement errors based on reflection (mm), ZR=350 mm

● H: Height of the SH detection plane from the reference plane (ground). It must be at a maximum height of 200 mm everywhere, otherwise a lying person may not be detected. Under normal conditions, the recommended value for H is 150 mm.

Safety Distance for Hazardous Point Protection

The calculation method for the safety distance according to the standard ISO 13855 is as follows (reference):

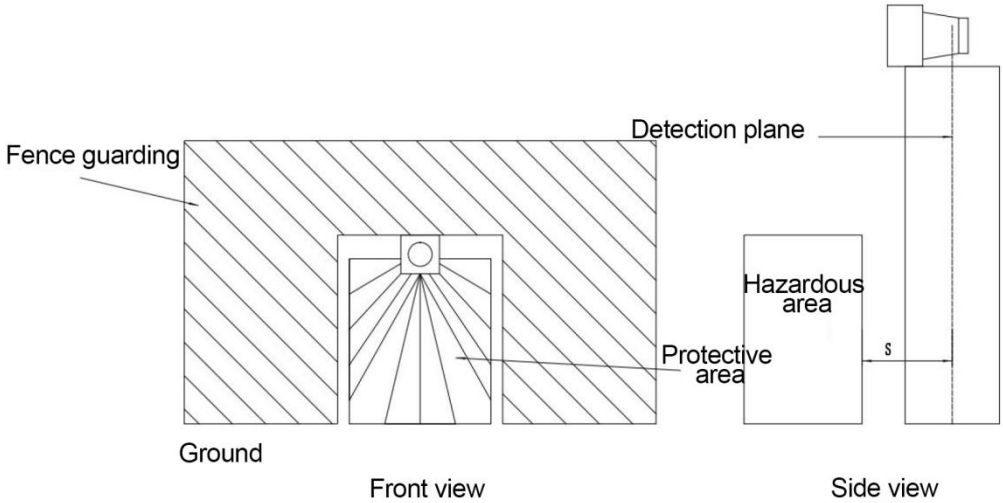

Figure 6-4 Safety Distance Calculation for Hazardous Point Protection

S = K×T + C

● S: Minimum safety distance (mm)

● K: Speed of object intruding into the protective zone (mm/s); K=1600 mm/s

● T: Total response time (t1 + t2)

t1: SH response time (s)

t2: Machine stopping time including the machine control system response time (s)

● C: Additional distance considering intrusion occurring before the protective equipment is activated (mm); C=850 mm

6.2 System Description

SH connects to the control system of the monitoring equipment through the rear power/output interface cable and a power extension cable (optional). The D-type scanner can be connected to the host computer software via the network connection interface or the front USB interface for safety-related application configuration. The S-type scanner is connected to the host computer software via the front USB interface for safety-related application configuration.

6.3 Wiring Precautions

· Wiring must be performed with the power disconnected.

· Double insulation or reinforced insulation must be used between all input/output interfaces and hazardous voltages.

· The cables of SH must be kept away from high-voltage wires and power lines.

· Both OSSDs must be used simultaneously; otherwise, the safety of the system will be reduced.

· Unauthorized replacement of cables by users is strictly prohibited.

· Wiring must be performed correctly after confirming the signal names of all terminals.

Power Supply

The DC power supply of SH must meet all the following requirements:

· The output voltage is within the rated voltage range of SH (DC 24V ± 20%).

· Meets the load current requirements.

· Double insulation or reinforced insulation is used between the primary and secondary circuits.

· Output hold time >= 20 ms during external voltage fluctuations or drops.

· Has auto-recovery overcurrent protection characteristics.

· The power supply must have output overvoltage and overcurrent protection functions.

· Must comply with local laws and regulations regarding EMC and electrical equipment safety requirements.

Wiring Steps

1) Connect the power cable plug to the scanner socket.

2) Wire according to the functional requirements as shown in Table 2-3.

3) Use the configuration cable to connect the scanner and the computer for various function configurations.

6.4 Installation Environment

The protection objects of SH must meet the following conditions:

· Opaque or translucent objects.

· The size of objects intruding into the protective zone must be greater than or equal to the object resolution (detection capability) of SH.

Ensure that the installation environment for SH to achieve safety protection meets the following conditions:

Within the specified environmental range (temperature, humidity, ambient light, shock, vibration, etc.).

· No flammable or explosive gases.

· No smoke, particulates, corrosive chemicals, or other substances.

· No mirrors or other highly reflective objects exist in the protective zone, and no strong light interference (such as direct light) is imposed on SH.

· Do not use additional transparent protective covers to prevent the optical path from being affected.

· No small objects (such as cables) exist in the protective zone, even if they do not trigger zone interruption.

⚠ Warning

Installation environments that do not meet the above requirements may cause the protective equipment to fail.Special optical and electromagnetic environments may affect SH and reduce the protective performance of the scanner, such as: strong electric fields caused by condensation on the optical window, welding cables, or induction cables.

Supplementary protective measures:

· If there are unavoidable obstacles in the protective zone that interfere with the field of view, additional protective measures must be taken.

· If persons can stay between the protective equipment and the hazardous point without being detected, additional protective measures must be taken.

· By selecting the correct installation position or using additional protective measures, eliminate situations such as reaching above or below the safety laser scanner, crossing over, or pushing the safety scanner.

Preventing Interference:

· Avoid external light sources on the scanning plane, such as direct sunlight on the scanning plane or direct placement of halogen headlamps, infrared light sources, and stroboscopes on the scanning plane.

· Install with offset positioning so that the scanning planes are on different planes or slightly tilted to make the scanning planes tangent, thereby avoiding mutual interference that may exist when multiple SH units are mounted on the same plane simultaneously.

Avoiding Unprotected Areas:

Behind the safety scanner, there may be undetected areas. If the scanner is installed using mounting components, the undetected area will be larger. The following measures are recommended to compensate:

① Install deflecting panels to protect the undetected area;

② Install SH inside the machine or vehicle guard.

7. Inspection and Maintenance

7.1 Initial Inspection

⚠ Warning

When the controlled equipment is first started, accidents may occur causing personal injury. Please ensure that no persons remain in the hazardous area!

If the operating conditions of SH do not meet any of the following inspection items, do not use the controlled equipment, otherwise accidents may occur, seriously endangering the safety of the machine operator!

An initial inspection must be performed before using this product in the following four situations: first commissioning of the product, after long-term shutdown, after modifications to the controlled equipment, and after reconfiguring SH.

Pre-check of Installation Conditions

1) The window surface is clean and free of any damage.

2) Installed in a location free from external light source interference (e.g., incandescent lamps, strobe lights).

3) Ensure that the controlled equipment stops operating when the OSSD is in the OFF state.

4) After installation, the fastening screws of SH are not loose.

5) After SH is installed, ensure that the controlled equipment cannot be operated when a person or object is present in the hazardous area.

6) When two or more SH units are installed in adjacent positions, take measures to prevent mutual interference.

7) Ensure that the minimum safety distance calculation complies with the laws, regulations, and standards of the country or region of installation.

Pre-check of Wiring

1) The power supply of SH is DC 24V ± 20%, and the power polarity is checked.

2) During wiring, both OSSD1 and OSSD2 must be connected to the safety-related part of the controlled equipment's control system.

3) The insulation of the transmission cable is free of any damage.

SH Detection When Controlled Equipment is Stopped

1) To ensure that SH still works normally when the controlled equipment is stopped, the corresponding test piece (meeting the minimum detectable size) should be used to perform the following tests. In these cases, only SH should be powered normally, and it must be ensured that the controlled equipment has stopped operating.

2) After power-on and normal operation, when no object is detected in the protective zone, the OSSD1 and OSSD2 indicators light up green normally.

3) When the test piece appears in the designated protective zone, the OSSD1 and OSSD2 indicators light up red normally. This test must be performed for the entire protective zone.

SH Detection When Controlled Equipment is Operating

To ensure that SH works normally and can control the operating state of the controlled equipment during normal operation, the corresponding test piece (meeting the minimum detectable size) should be used to perform the following tests. In these cases, both SH and the controlled equipment must be powered normally, and the entire protective zone must be tested.

1) Disconnect the power supply of SH, and the controlled equipment stops operating.

2) SH detects the test piece intrusion in the protective zone, the OSSD safety output of SH changes to the OFF state, and the controlled equipment stops operating.

3) The response time of the entire safety-related control system (from test piece intrusion into the protective zone to machine stoppage) is less than the total response time calculated for the safety distance.

7.2 Window Contamination Detection Cleaning and Replacement

7.2.1 Window Contamination Detection

The optical window is an important component of SH. If the window is contaminated, the detection capability of the scanner will be weakened due to light attenuation. When contamination is severe, the scanner may misjudge the contaminant as an object approaching the protective zone, causing the safety output to enter the OFF state.

When SH detects window contamination, the contamination indicator at the bottom and the corresponding contamination indicator at the top of the window change from green to red, and the safety output of OSSD(s) is switched off, as shown in Figure 7-1.

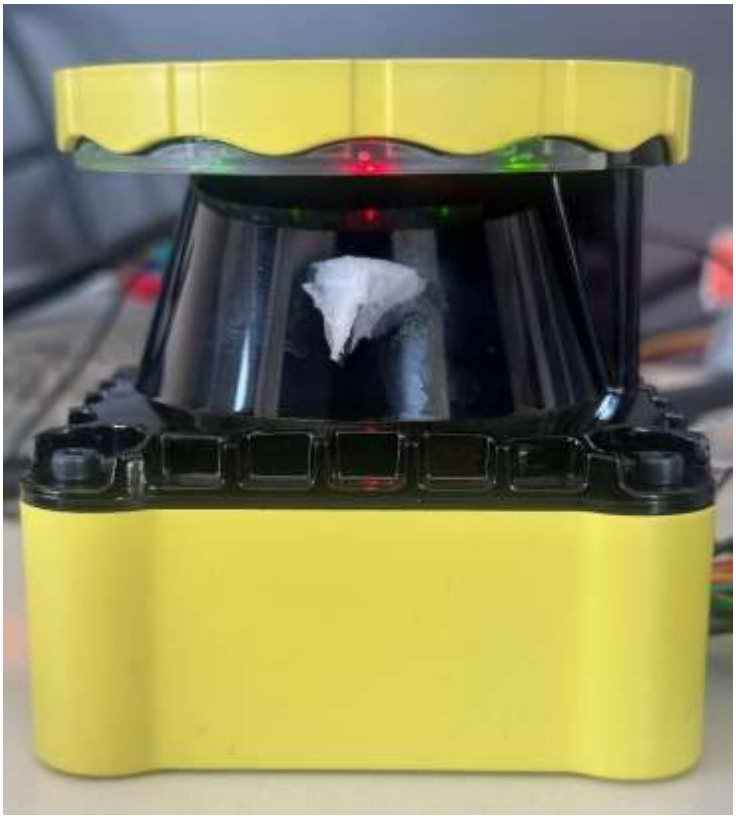

Figure 7-1 SH Window Contamination Detection

▲ Notice
The optical window must be kept clean. If the window is contaminated, use a soft cloth dampened with a neutral detergent that does not corrode polycarbonate to wipe off the contaminants in a timely manner.If the window is damaged, contact a professional for replacement in a timely manner.

7.2.2 Window Cleaning

The window is a key component of the detection system. Depending on environmental conditions, the optical window must be cleaned regularly and when contaminated. For example, dust particles may adhere to the optical window due to electrostatic effects. Use a soft cloth dampened with a neutral detergent that does not corrode polycarbonate to wipe off the contaminants.

If the optical window is contaminated, the detection capability of SH will be weakened due to the attenuation of light intensity. When the contamination is sever, SH will detect the contaminant as an object approaching or entering the protective zone, thereby switching off the safety output OSSD to control the controlled equipment to stop working, causing unnecessary losses. When SH detects contamination on the optical window, the top contamination indicator will turn red to indicate the contamination location, and the CLEAN indicator on the housing will also turn red to indicate that the optical window is contaminated.

▲ Notice
Avoid using corrosive or abrasive cleaning agents to clean the window.Anti-static cleaning agents are recommended.

7.2.3 Window Replacement

If the window is damaged, contact a professional for replacement.

7.3 Daily Inspection

Before each restart of the equipment, the operator should perform a daily inspection of the safety scanner:

1) Check whether the fastening screws of the installed SH are loose.

2) The SH window surface is clean and free of any damage.

3) When the OSSD is in the OFF state, the controlled equipment stops operating.

7.4 Routine Inspection

The relevant safety officer should perform a routine inspection of the equipment at least every six months:

1) Check whether the fastening screws of the installed SH are loose.

2) Check whether the position of SH has changed.

3) The SH window surface is clean and free of any damage.

4) The insulation of the transmission cable is free of any damage.

5) All signals are correctly connected to external equipment, and the connections are safe and reliable.

6) Ensure that the controlled equipment stops operating when the OSSD is in the OFF state.

8. Troubleshooting Reference

Status Indicator	Normal Operation	Fault	Fault Cause	Solution
POWER	Green	Off	Scanner not properly powered	Check the power supply device
CLEAN	Green	Red	Contamination detected on the optical window	Clean the optical window in a timely manner; if necessary, replace the window or contact a professional for assistance
MOTOR	Green	Red	Internal motor fault of the scanner	Contact a professional for assistance
LASER	Green	Red	Scanner measurement error	Contact a professional for assistance
OTHER	Green	Red	Other faults	Contact a professional for assistance

▲ Notice

If the OSSD remains in the OFF state, check the host computer settings to ensure the zones are correctly configured.If a fault occurs, try restarting SH. If the problem cannot be resolved, contact a professional for assistance in a timely manner.

9. Standards and Declarations

9.1 International Standards and Directives

The company hereby declares that the SH Safety Laser Scanner complies with the requirements of the following EU directives and standards (including all relevant amendments), and is manufactured based on the standards and/or technical specifications described in the EU Declaration of Conformity.

· European Standards:

EN 61326-1: 2013

EN 61496-1: 2020 (Type 3 ESPE)

EN 61496-3: 2019 (Type 3 AOPDDR)

EN ISO 13849-1: 2015 (Cat. 3, PL d)

EN ISO 13849-2: 2012 (Cat. 3, PL d)

· EU Directives:

Machinery Directive 2006/42/EC

2014/30/EU

· International Standards:

IEC 61496-1: 2020 (Type 3 ESPE)

IEC 61496-3: 2019 (Type 3 AOPDDR)

IEC 61508-1~7: 2020 (SIL 2)

IEC 61326-1: 2021

IEC 62061

ISO 13855

The company also referenced the following standards when designing SH:

EN 60529 (IP65)

IEC 60825-1 (Class 1 laser product)

9.2 Legal Statement and Liability

Quality Assurance:

The warranty period for SH is 12 months, starting from the date the product is delivered to the buyer's designated location.

When this product is used for special applications other than those specified, the company makes no commitment regarding its suitability. The user shall decide whether to use it based on their own needs. The company provides no quality assurance for special applications.

Liability:

The company shall not be liable for indirect losses, loss of commercial profits, or other consequential damages arising from the use of the product, unless otherwise specifically agreed in the contract. In any case, the compensation amount shall not exceed the contract price of the product involved.

The technical parameters in the product manual are laboratory test reference values and do not constitute a quality guarantee. Users need to verify the validity of the parameters based on actual working conditions.

The company only addresses quality issues that arise when the product is correctly operated, stored, installed, and maintained. After technical inspection confirms that the product meets the above conditions, has not been unauthorizedly modified, and is free of contamination or damage, the company will provide quality after-sales service to the customer in accordance with the product purchase contract.

The company shall not be liable for any losses caused by the customer's violation of the operating instructions.

The company is not responsible for warranty for failures caused by natural disasters such as fire, earthquake, and flood, or external factors such as abnormal voltage.

10. Version Information

Version	Release Date	Changes
V1.0	2025-05	